US009738338B2

(12) **United States Patent**
Strong et al.

(10) **Patent No.: US 9,738,338 B2**
(45) **Date of Patent: Aug. 22, 2017**

(54) **DUAL TRAILING AXLE SUSPENSION SYSTEM**

(71) Applicants: **Brooks Strong**, Houston, TX (US); **Joshua Cayne Fisher**, Montgomery, TX (US)

(72) Inventors: **Brooks Strong**, Houston, TX (US); **Joshua Cayne Fisher**, Montgomery, TX (US)

(*) Notice: Subject to any disclaimer, the term of this patent is extended or adjusted under 35 U.S.C. 154(b) by 0 days.

(21) Appl. No.: **14/803,038**

(22) Filed: **Jul. 18, 2015**

(65) **Prior Publication Data**

US 2017/0015165 A1 Jan. 19, 2017

(51) **Int. Cl.**
B62D 61/12 (2006.01)

(52) **U.S. Cl.**
CPC ***B62D 61/12*** (2013.01); ***B62D 61/125*** (2013.01); *B60G 2204/47* (2013.01); *B60G 2300/402* (2013.01)

(58) **Field of Classification Search**
CPC .. B62D 61/12; B62D 61/125; B60G 2204/47; B60G 2204/4702; B60G 2300/402; B60G 5/00
USPC 280/86.5; 180/24.02, 209
See application file for complete search history.

(56) **References Cited**

U.S. PATENT DOCUMENTS

3,640,578 A * 2/1972 Finney ..... B60G 17/005 298/17 S
3,706,464 A * 12/1972 Burrows B62D 53/0821 280/401
4,063,779 A * 12/1977 Martin B62D 61/125 180/24.02
4,335,898 A * 6/1982 Orosz B60P 3/062 180/24.02
4,350,358 A * 9/1982 Ferris B62D 61/125 180/24.01
5,407,251 A * 4/1995 Ritchie, II B60G 9/02 280/43.23
5,458,355 A * 10/1995 Young B62D 61/12 180/24.02
5,494,309 A * 2/1996 Roy B62D 53/067 280/401
5,823,629 A * 10/1998 Smith B60G 9/02 180/209
6,050,578 A * 4/2000 Beck B62D 53/067 280/404
6,189,901 B1 * 2/2001 Smith B60G 9/00 180/209

(Continued)

Primary Examiner — Laura Freedman

(57) **ABSTRACT**

A dual trailing axle suspension system is disclosed wherein a pair of trailing axles are suspended from an auxiliary chassis with axle suspensions that provide spring action for isolating road-induced axle movement from the auxiliary chassis. And the auxiliary chassis is suspended from a chassis of a motor vehicle by an auxiliary chassis suspension adapted to deploy the auxiliary chassis from a stowed location on the motor vehicle to a deployed location at a substantial distance behind the motor vehicle chassis. And the auxiliary chassis suspension is adapted to cause the auxiliary chassis to help support the motor vehicle chassis to a variable degree by acting on the auxiliary chassis at a location between the two axles and in a manner determined by whether the spring action provided by the axle suspensions is set or variable.

21 Claims, 16 Drawing Sheets

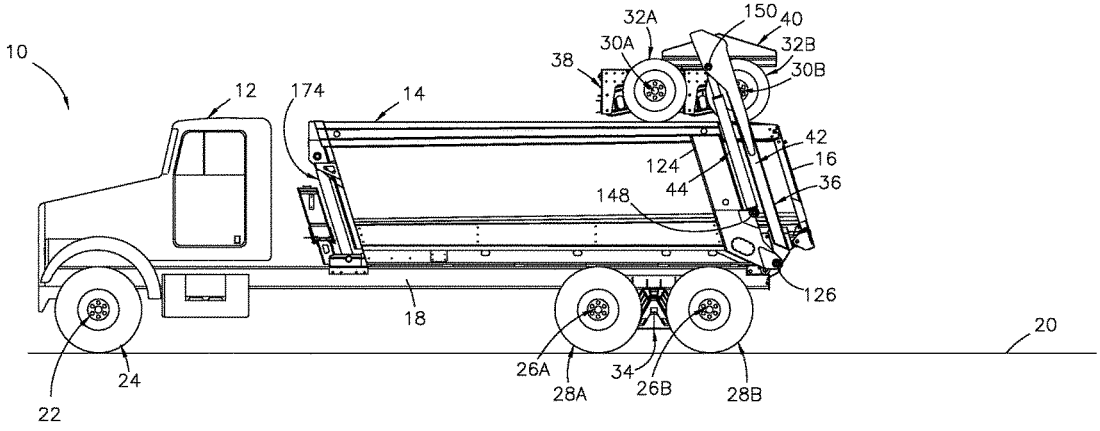

(56) **References Cited**

U.S. PATENT DOCUMENTS

6,247,712	B1 *	6/2001	Smith	B62D 61/12 180/209
7,731,208	B2 *	6/2010	Strong	B62D 61/12 180/209
7,740,252	B2 *	6/2010	Strong	B62D 61/12 280/86.5
7,775,308	B2 *	8/2010	Strong	B62D 61/12 180/209
7,775,533	B2 *	8/2010	Strong	B60T 13/683 180/24.02
7,845,668	B2 *	12/2010	Bergeron	B60P 3/07 280/405.1
8,118,532	B2 *	2/2012	Phillips	B60L 11/18 414/435
8,485,538	B1 *	7/2013	Strong	B62D 61/12 180/209
8,523,202	B1 *	9/2013	Strong	B62D 61/12 180/209
8,523,203	B1 *	9/2013	Strong	B62D 61/12 180/24.02

* cited by examiner

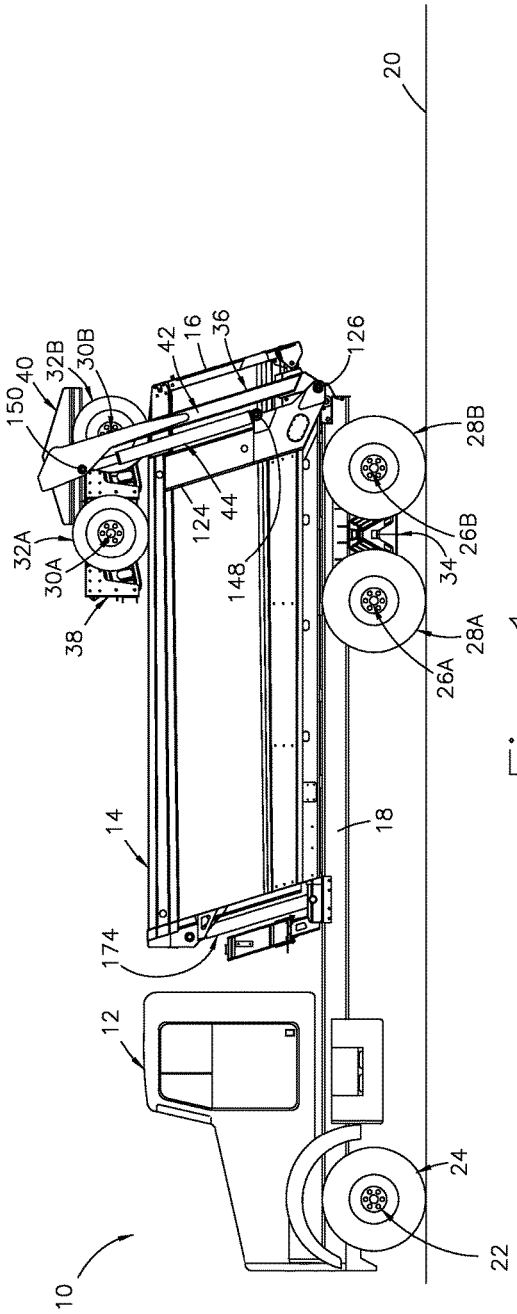
20
150
40
32B
30B
42
16
36
126
28B
32A
30A
124
44
148
34
26B
38
28A
26A
14
18
174
12
24
22
10

Fig. 1

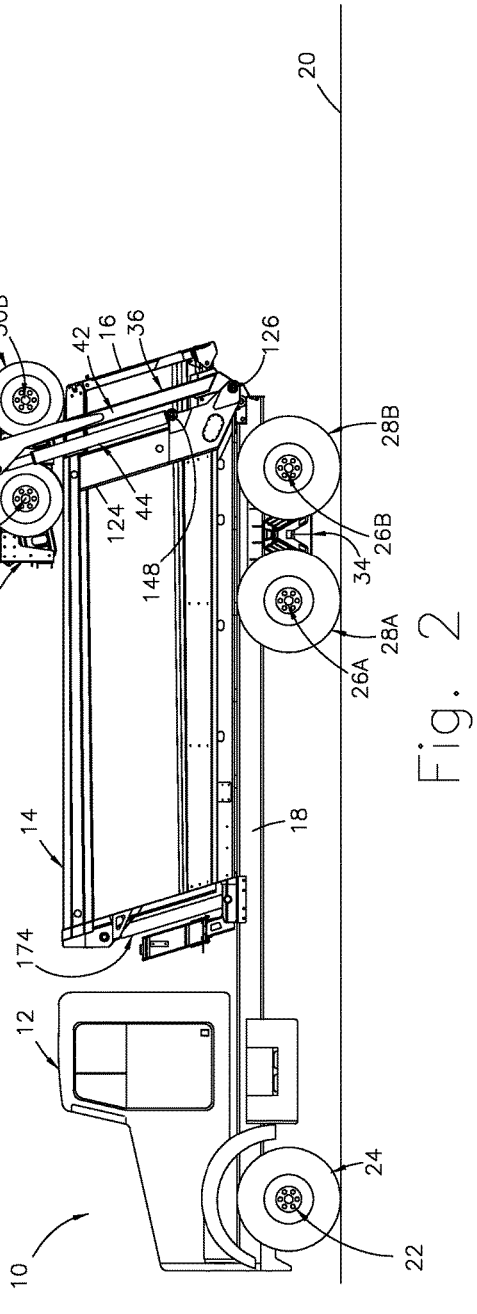
20
150
40
32B
30B
42
16
36
126
28B
32A
30A
124
44
148
34
26B
38
28A
26A
14
18
174
12
24
22
10

Fig. 2

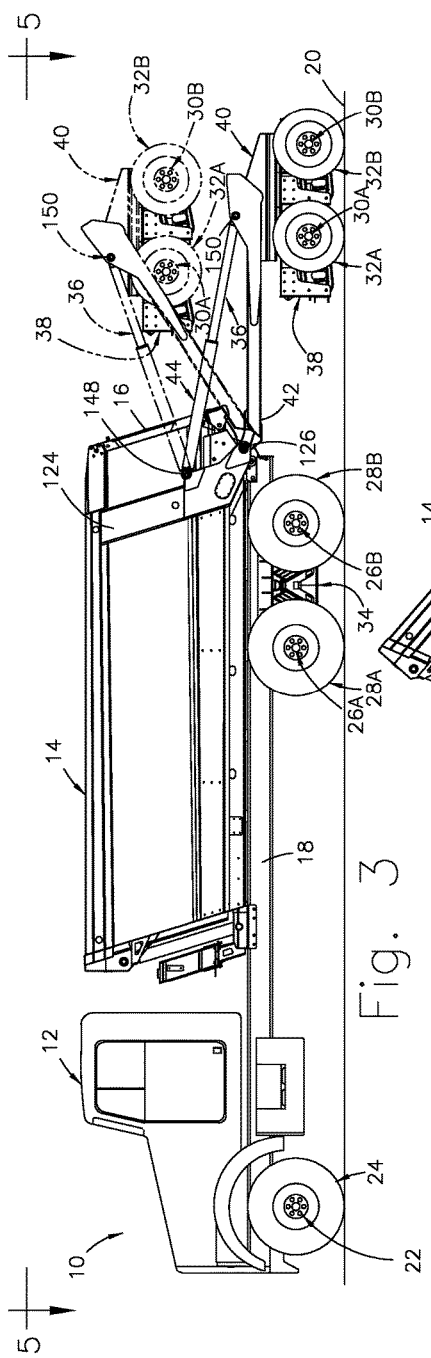
5
5
10
12
14
16
18
20
22
24
26A
26B
28A
28B
30A
30B
32A
32B
34
36
38
40
42
44
124
126
148
150

Fig. 3

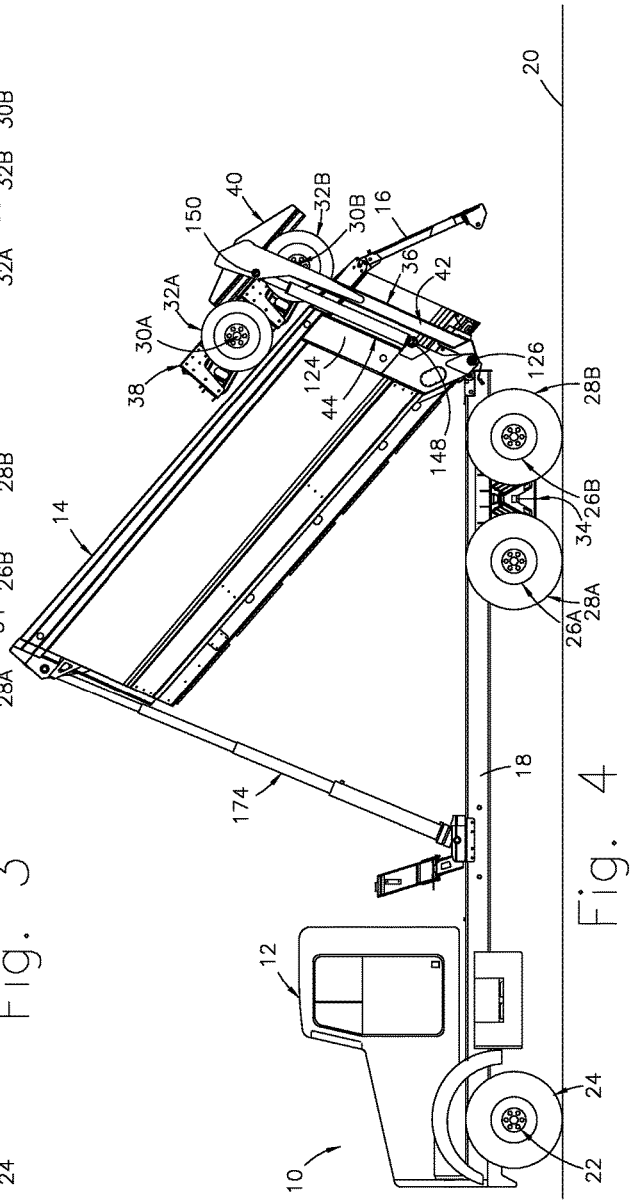
10
12
14
16
18
20
22
24
26A
26B
28A
28B
30A
30B
32A
32B
34
36
38
40
42
44
124
126
148
150
174

Fig. 4

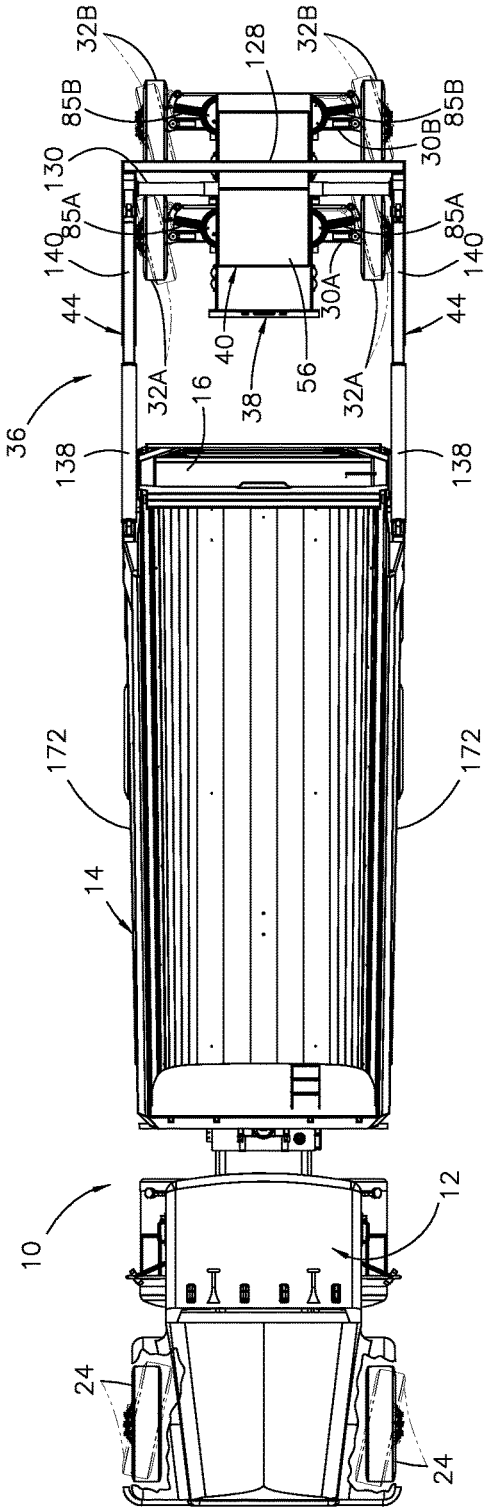
32B
128
32B
85B
85B
30B
130
85A
85A
140
140
30A
44
44
40
56
32A
32A
16
38
36
138
138
172
172
14
12
10
24
24

Fig. 5

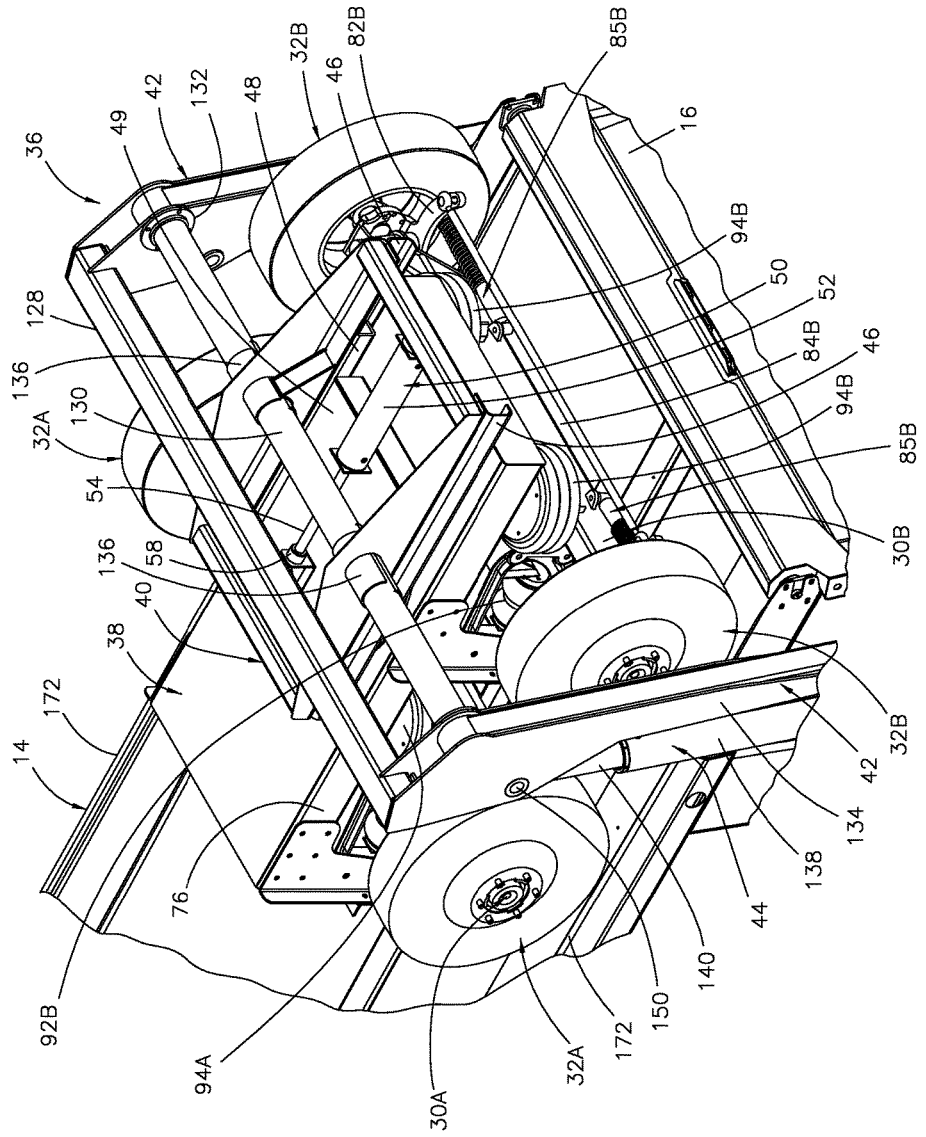
36
49
42
132
48
32B
46
82B
85B
16
94B
50
52
84B
46
94B
85B
30B
128
136
32A
130
54
136
58
40
38
172
14
92B
94A
30A
32A
172
150
140
44
138
134
42
32B
76

Fig. 6

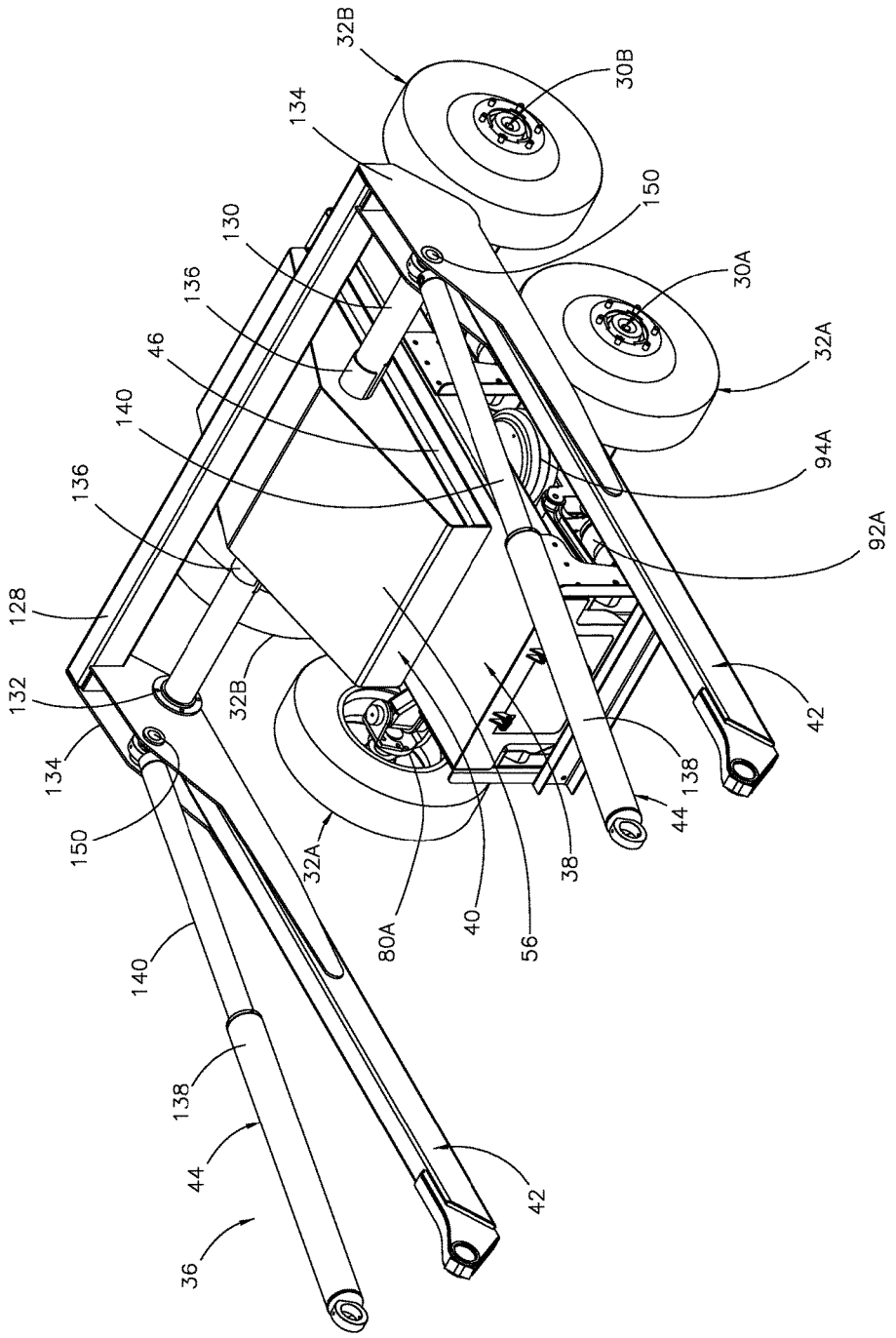
32B
30B
134
150
130
30A
136
32A
46
140
94A
136
92A
128
132
32B
42
134
138
44
150
32A
38
80A
40
56
140
138
44
42
36

Fig. 7

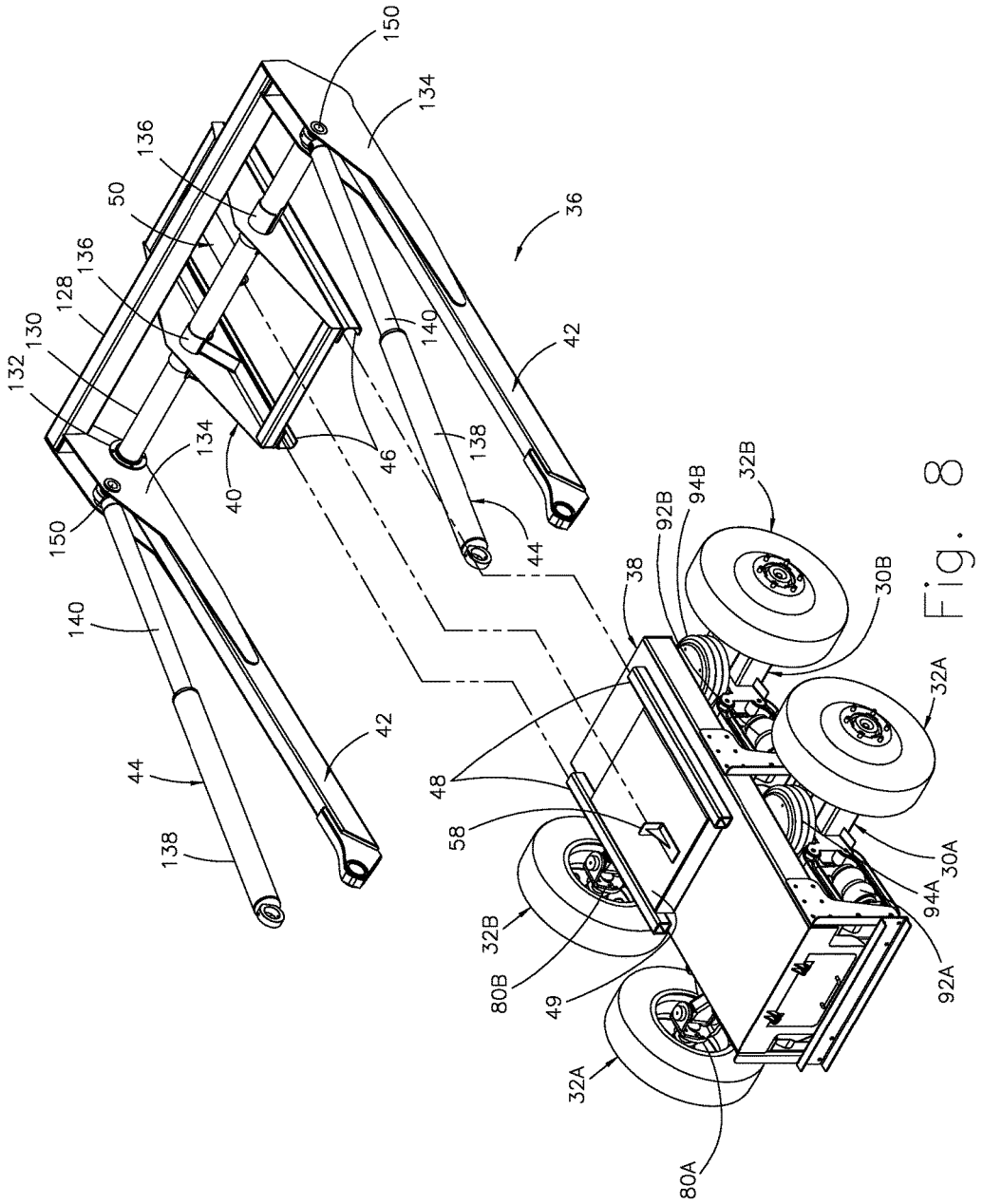
150
134
136
50
36
136
128
130
132
140
42
134
40
46
138
44
150
140
42
44
138
38
92B
94B
32B
30B
32A
48
58
32B
80B
49
32A
80A
30A
94A
92A

Fig. 8

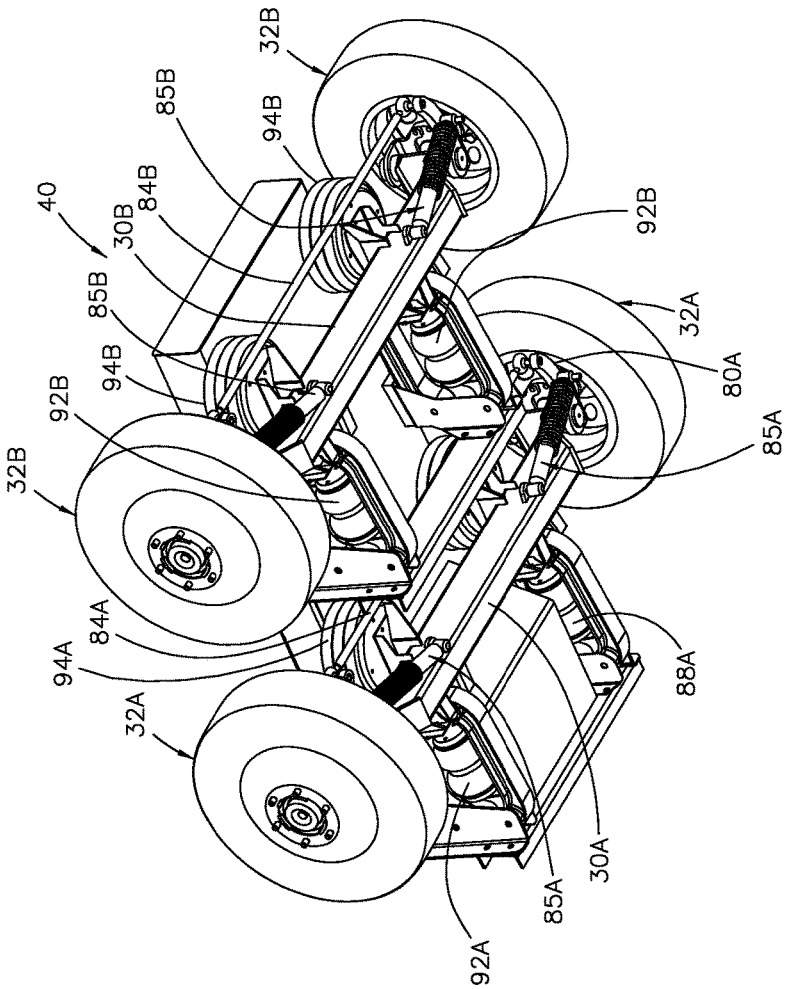
32B
85B
94B
40
84B
30B
92B
85B
32A
94B
80A
92B
85A
32B
84A
94A
88A
32A
30A
85A
92A

Fig. 9

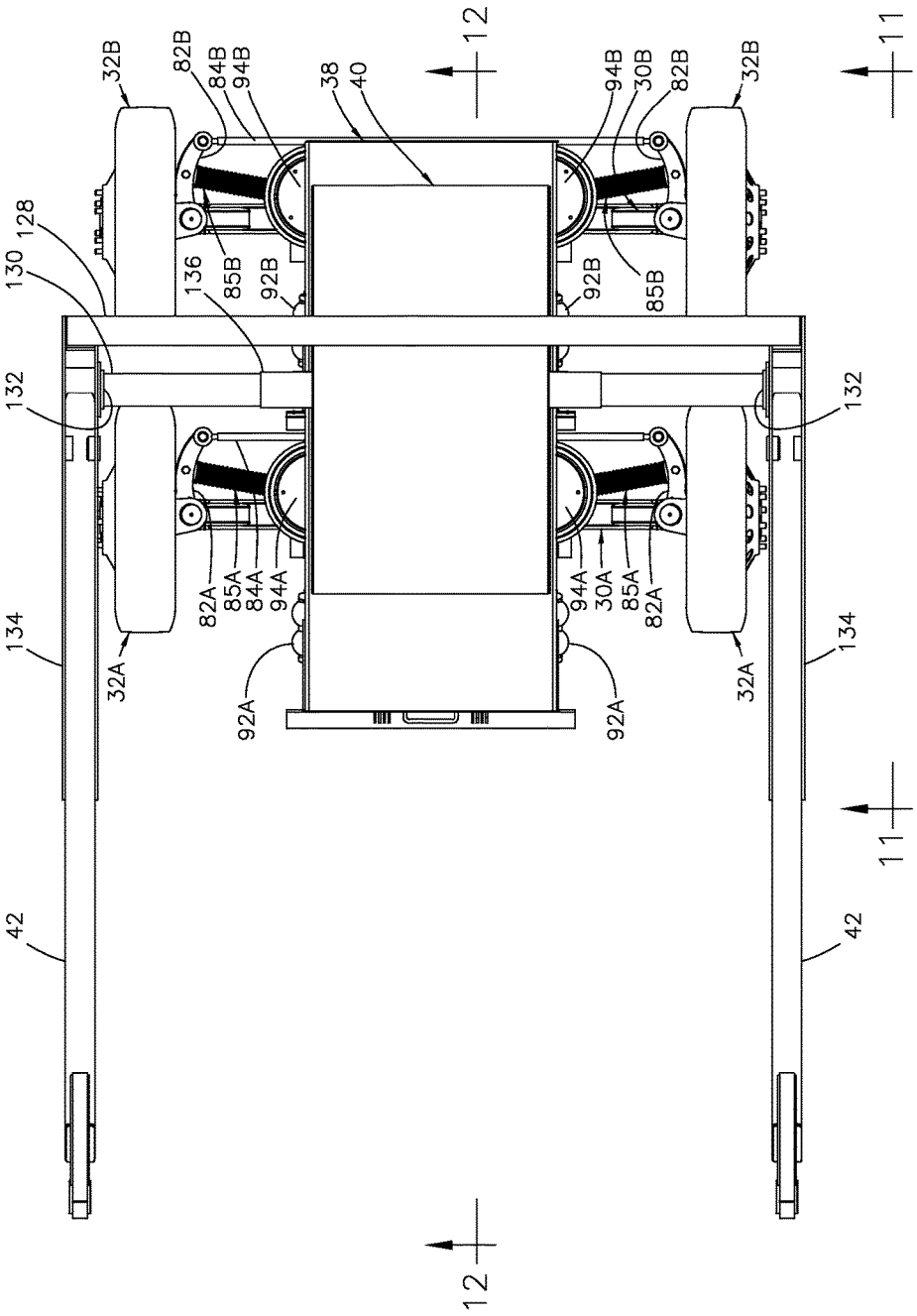
12
11
32B
82B
84B
94B
38
40
94B
30B
82B
32B
128
130
136
85B
92B
92B
85B
132
132
82A
85A
84A
94A
94A
30A
85A
82A
134
134
32A
32A
92A
92A
42
42
11
12

Fig. 10

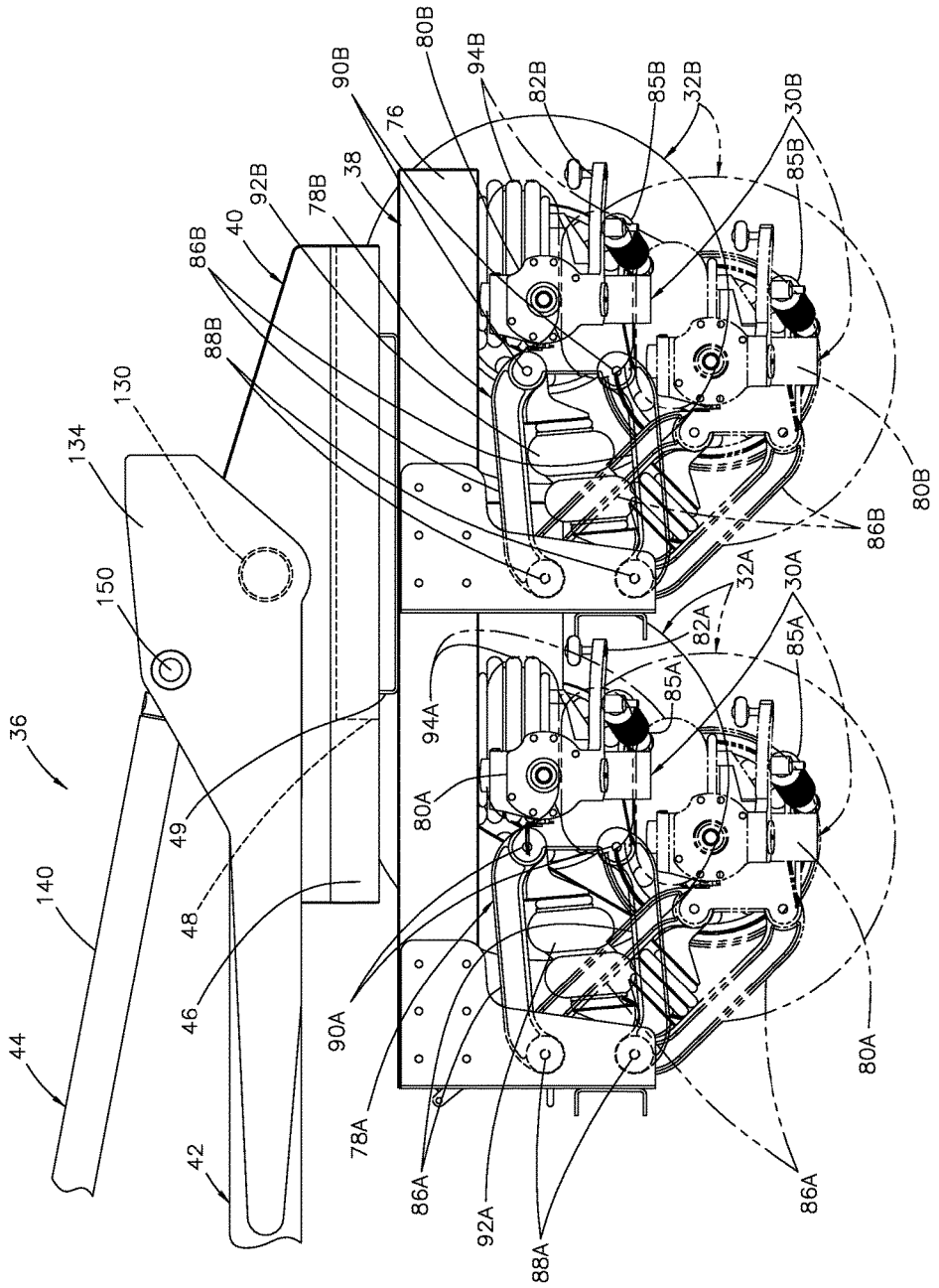
36
44
140
42
46
48
49
150
134
130
40
38
76
78B
78A
80B
80A
82B
82A
85B
85A
86B
86A
88B
88A
90B
90A
92B
92A
94B
94A
30B
30A
32B
32A

Fig. 11

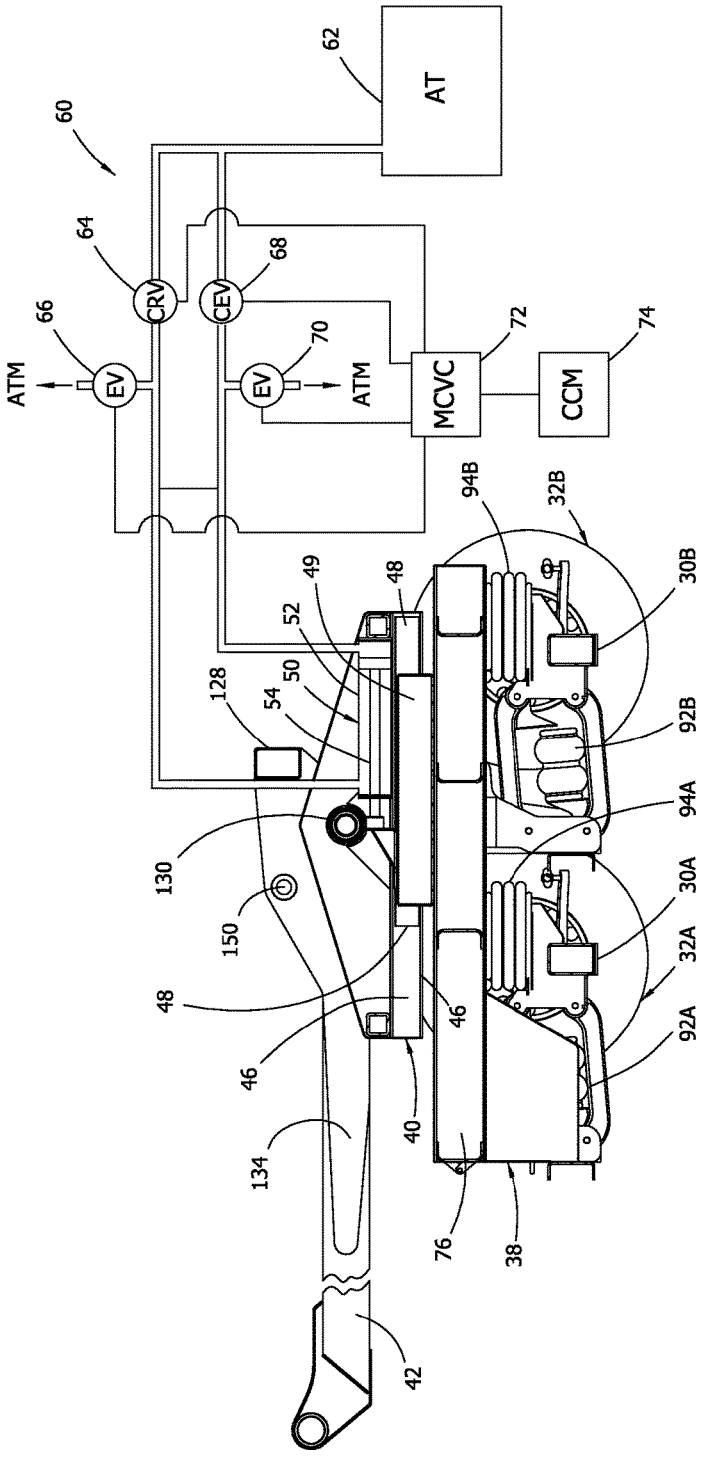
AT
62
60
64
CRV
68
CEV
66
ATM
EV
70
EV
ATM
MCVC
72
CCM
74
94B
32B
30B
49
48
52
50
128
54
92B
94A
130
150
30A
32A
48
46
92A
46
40
134
76
38
42

Fig. 12

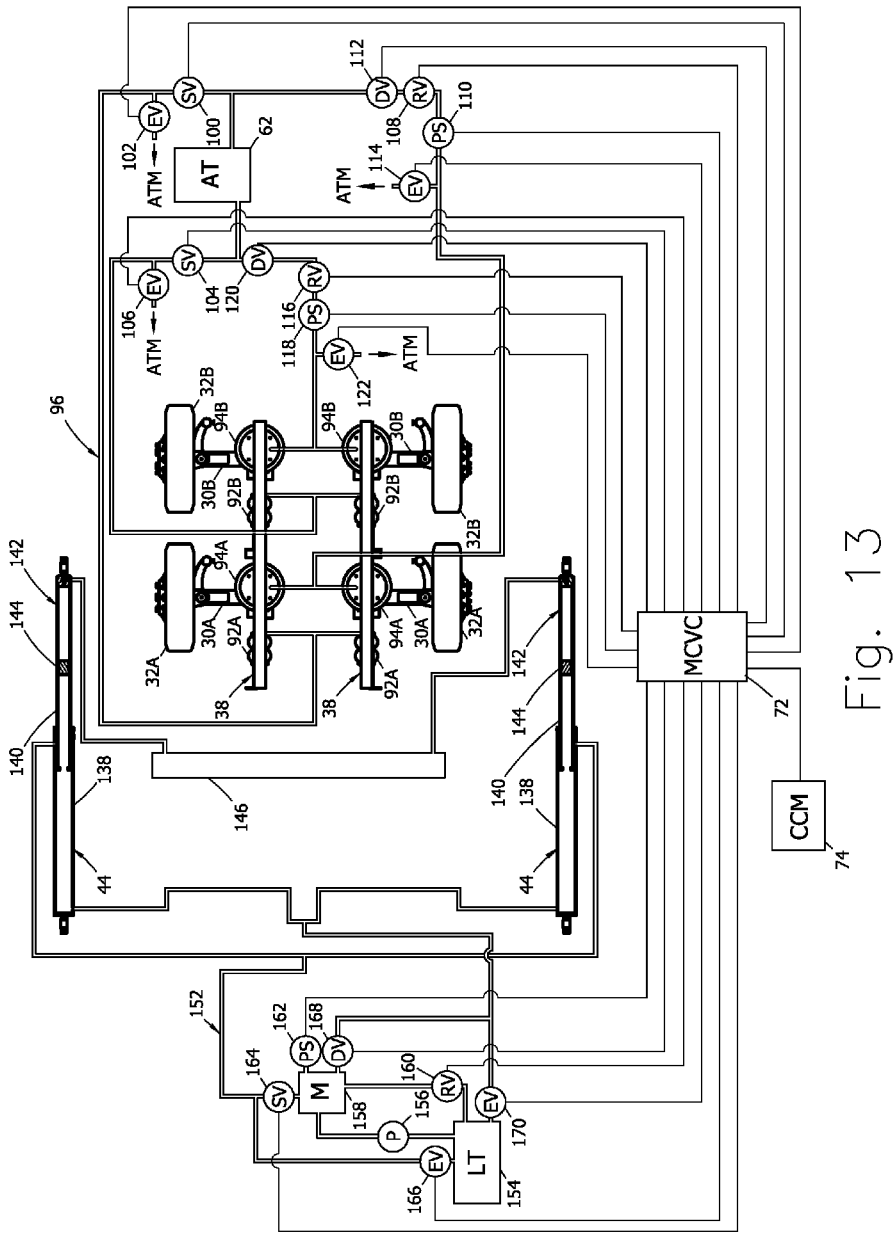
SV
EV
DV
RV
PS
ATM
AT
M
P
LT
MCVC
CCM
96
62
72
74
100
102
104
106
108
110
112
114
116
118
120
122
138
140
142
144
146
152
154
156
158
160
162
164
166
168
170
30A
30B
32A
32B
38
44
92A
92B
94A
94B

Fig. 13

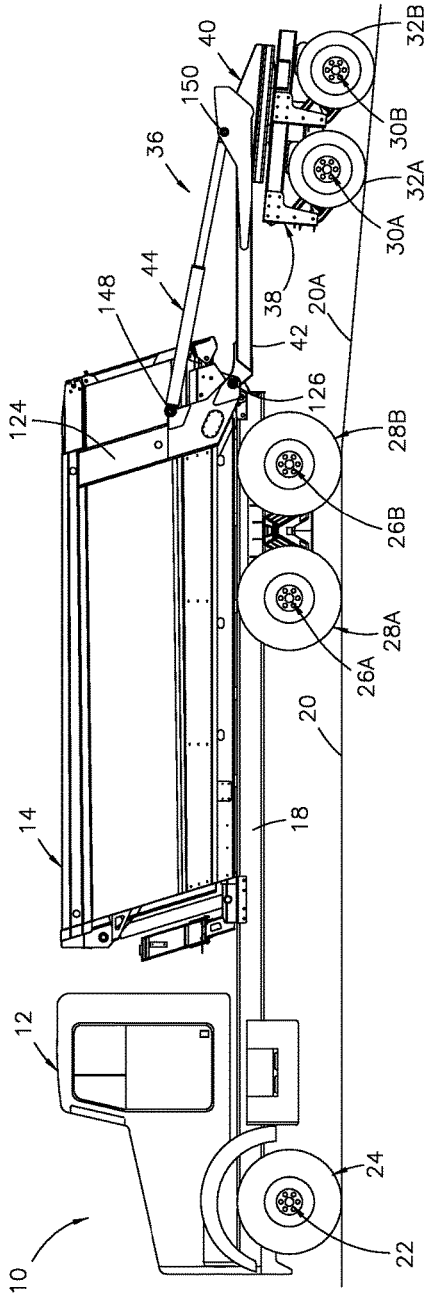
10
12
14
18
20
22
24
26A
26B
28A
28B
30A
30B
32A
32B
36
38
40
42
44
124
126
148
150

Fig. 14

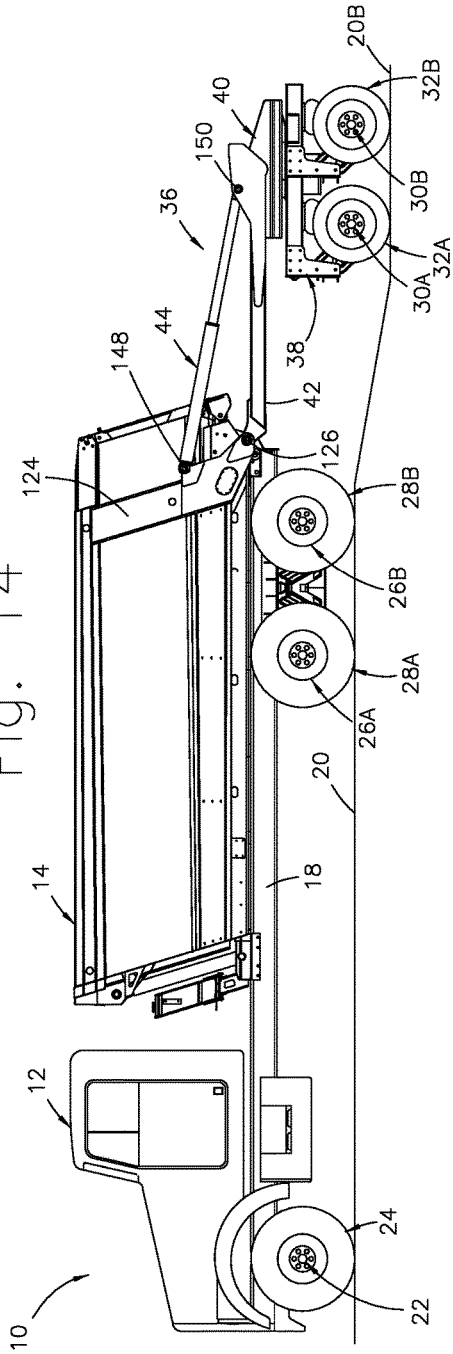
10
12
14
18
20
20B
22
24
26A
26B
28A
28B
30A
30B
32A
32B
36
38
40
42
44
124
126
148
150

Fig. 15

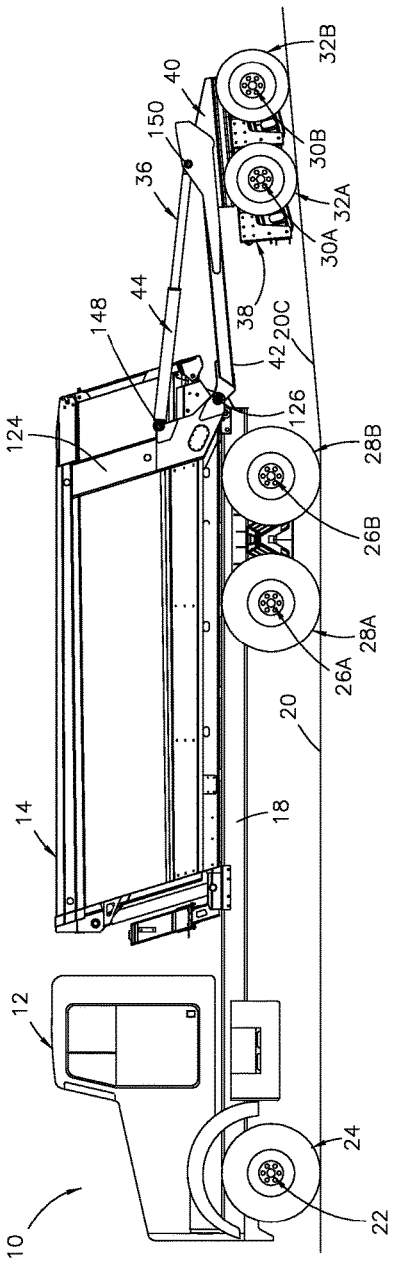
10
12
14
18
20
22
24
26A
26B
28A
28B
30A
30B
32A
32B
36
38
40
42
44
124
126
148
150

Fig. 16

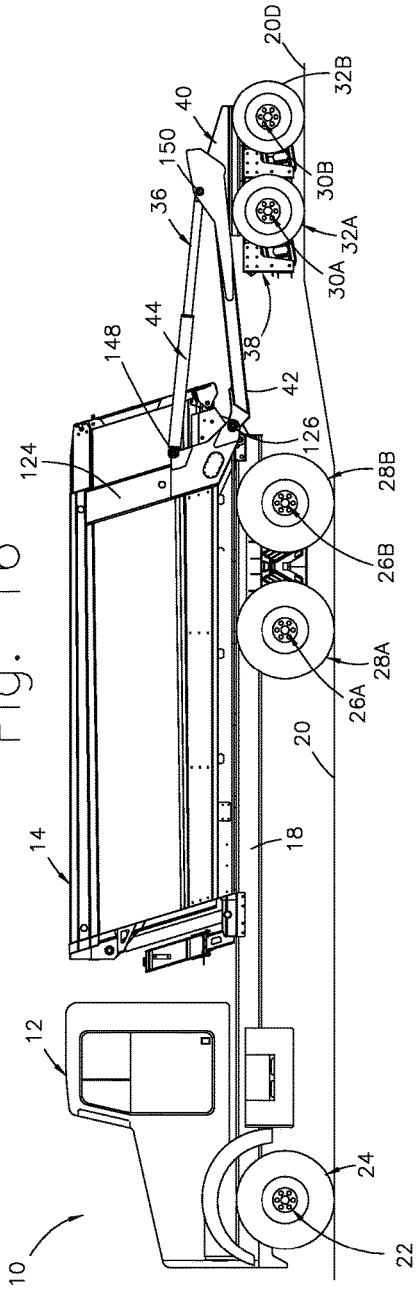
10
12
14
18
20
20D
22
24
26A
26B
28A
28B
30A
30B
32A
32B
36
38
40
42
44
124
126
148
150

Fig. 17

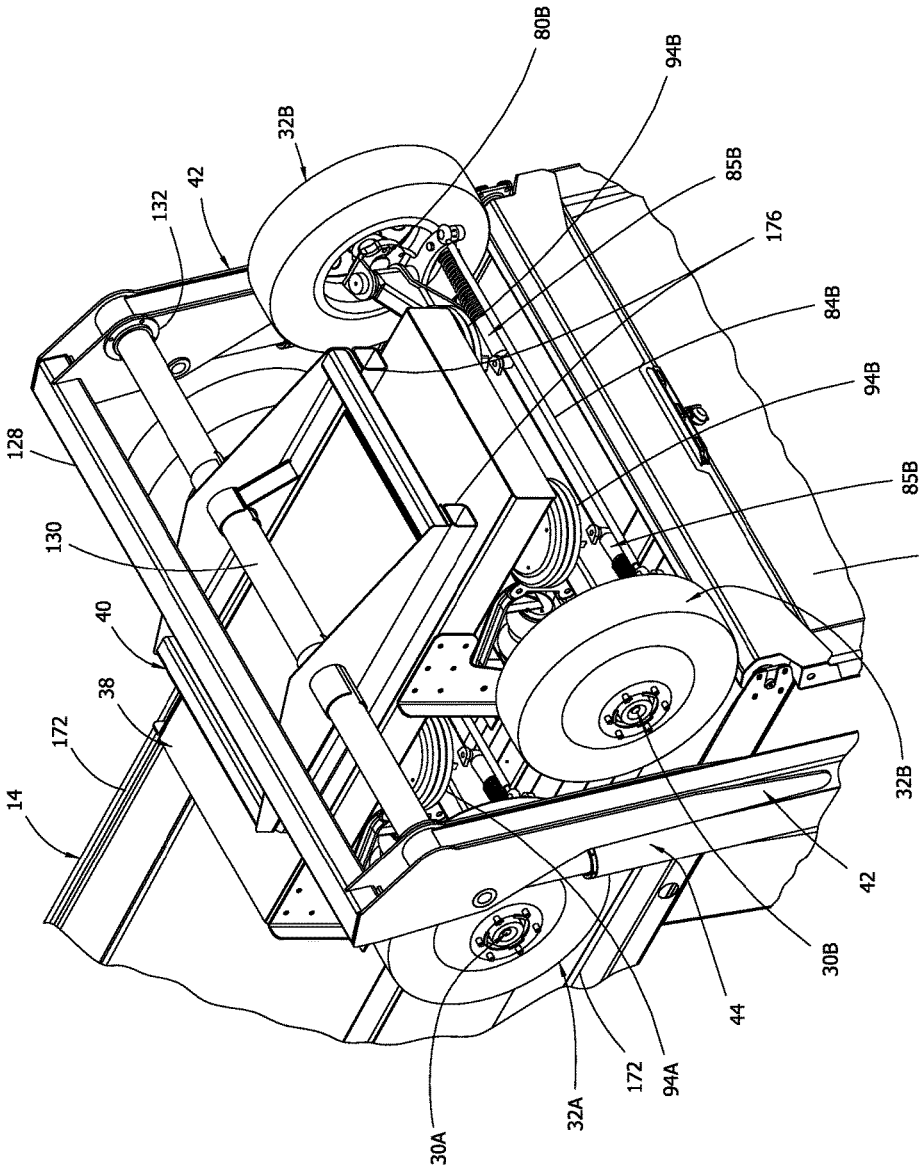
80B
94B
32B
85B
42
132
176
84B
94B
128
85B
130
16
40
38
172
14
32B
42
30B
44
172
94A
32A
30A

Fig. 18

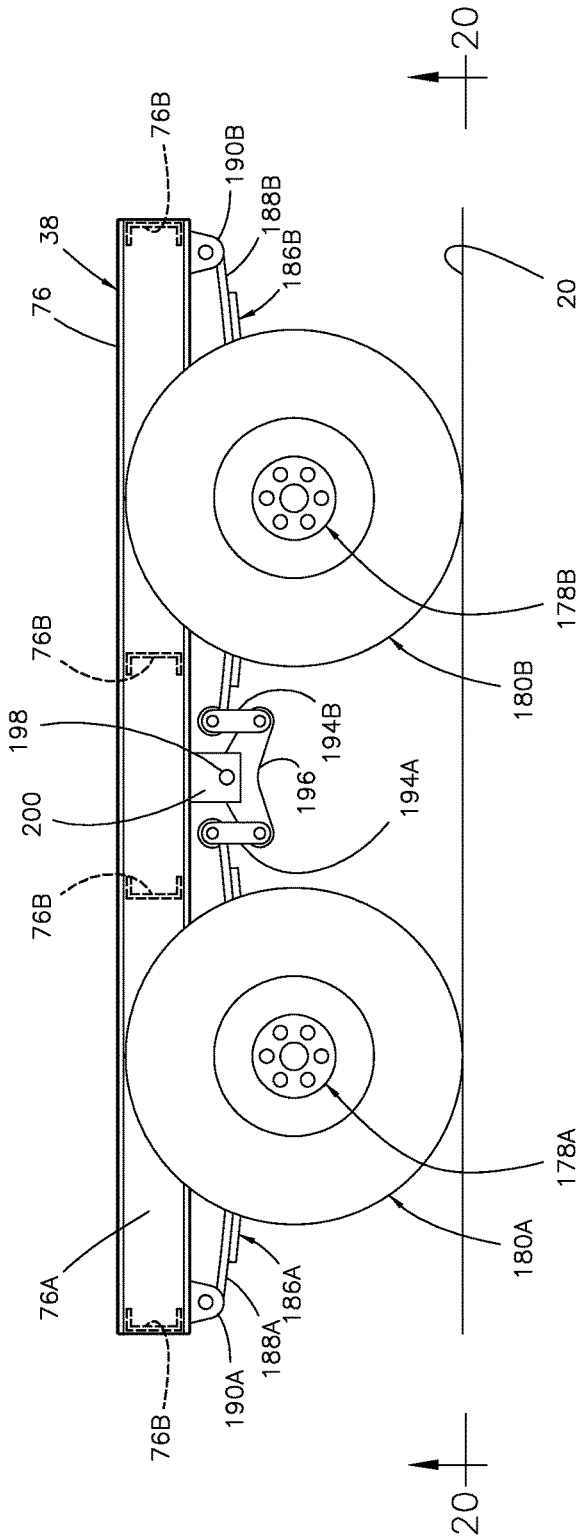
20
76B
190B
188B
186B
38
76
20
178B
180B
76B
198
194B
196
200
194A
76B
178A
180A
76A
186A
188A
190A
76B
20

Fig. 19

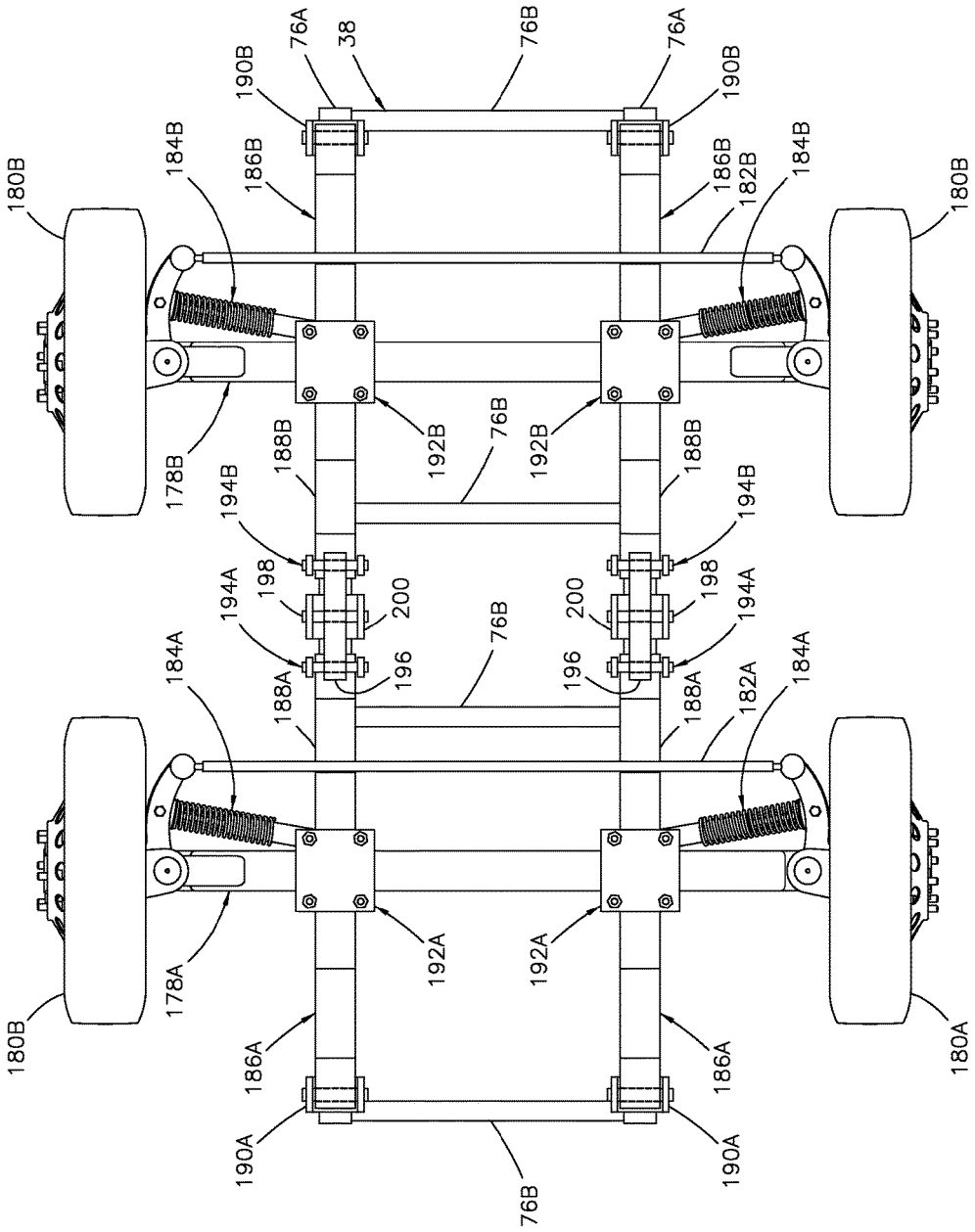
76A
38
76B
76A
190B
190B
184B
186B
186B
182B
184B
180B
180B
178B
192B
76B
192B
188B
188B
194B
194B
198
200
194A
196
76B
196
200
198
194A
184A
188A
188A
182A
184A
178A
192A
192A
180B
180A
186A
186A
190A
190A
76B

Fig. 20

DUAL TRAILING AXLE SUSPENSION SYSTEM

TECHNICAL FIELD

This invention relates to auxiliary axle suspension systems for motor vehicles and more particularly to trailing axle suspension systems and is related to U.S. patent application Ser. No. 14/803,041 entitled "TRAILER HITCH", U.S. patent application Ser. No. 14/803,045 entitled "AUTOMATIC AUXILIARY AXLE CONTROL SYSTEM", and U.S. patent application Ser. No. 14/803,048 entitled "AXLE LOAD MONITORING SYSTEM".

BACKGROUND OF THE INVENTION

Motor vehicles such as dump trucks, refuse trucks, transit concrete mixing trucks, open-bed trucks, utility trucks, military trucks and other vehicles of various types to which a significant load may be added for transport are limited in their load transporting ability by various factors. Such as the weight bearing capacity of their supporting axles and applicable federal and state law. With such laws for example limiting the gross vehicle weight to 80,000 pounds, the weight carried by a single axle to 20,000 pounds and there being an exception as to consecutive axles that limits them to carrying a prescribed combined weight depending on their number and spacing. For example, the combined axle carrying weight is limited to 34,000 pounds in regard to the two powered tandem axles that are typically employed with heavy duty load-transporting motor vehicles. And with such factors as a result impacting the use of such motor vehicles in that the more weight the vehicle can transport at a time, the more useful the vehicle can be provided other factors that impact the ability of the vehicle to perform in an acceptable manner are also taken into account. With such factors including the axle manufacturers rated load capacity.

And in regard to such motor vehicles where it is desired to increase their load carrying capacity within the prescribed limits, it is common practice to provide one or more auxiliary axles that are deployed on command to help support the motor vehicle and thereby reduce the weight carried by the axles that normally support the vehicle. Wherein the axles that normally support the vehicle are then referred to as primary axles and include at least one axle with steerable wheels and one or more powered axles with wheels. And the auxiliary axles are referred to as either a pusher axle, tag axle or trailing axle in distinguishing between where and how they are employed to help support the motor vehicle. Wherein a pusher axle is suspended from the motor vehicle chassis in a location to operate between a forwardly-located primary axle with steerable wheels under the control of the vehicle operator and one or more rearwardly-located primary axles with powered wheels. Whereas a tag axle is suspended from the motor vehicle chassis to operate rearward of one or more primary axles with powered wheels but not normally at any substantial distance behind the motor vehicle chassis. And a trailing axle (that has also been referred to as a tag axle and trailing tag axle) is also suspended from the motor vehicle chassis but in a manner to operate at a substantial distance rearward of the motor vehicle chassis.

And in considering the use of such auxiliary axles, their individual weight bearing capacity and their number available in being suitably applied to a particular motor vehicle limits their ability to provide the vehicle support desired. And in the case of trailing axles, their number has been limited for the lack of a suitable suspension system that can accommodate more than one to operate in a satisfactory manner at a substantial distance behind the motor vehicle chassis.

SUMMARY OF THE INVENTION

The present invention resides in a dual trailing axle suspension system wherein a pair of axles that serve as trailing axles are directly suspended from an auxiliary chassis with axle suspensions that provide spring action for isolating road induced axle movement from the auxiliary chassis. And the auxiliary chassis is suspended from a chassis of a motor vehicle by an auxiliary chassis suspension adapted to deploy the auxiliary chassis from a stowed location on the motor vehicle to a deployed location at a substantial distance behind the motor vehicle chassis. And the auxiliary chassis suspension is adapted to then cause the auxiliary chassis to help support the motor vehicle chassis to a variable degree by acting on the auxiliary chassis at a location substantially midway between the two axles in a manner determined by whether the spring action provided by the axle suspensions is set or variable.

These and other features of the invention are disclosed in the accompanying drawings and description of exemplary embodiments.

DESCRIPTION OF THE DRAWINGS

FIG. **1** is a side view of a dump truck employing a dual trailing suspension system according to the present invention wherein the two trailing axles are suspended with air spring suspensions and the trailing axles are shown in their stowed condition on the truck.

FIG. **2** is a side view of the dump truck wherein the trailing axles are shown positioned for deployment from their stowed condition.

FIG. **3** is a side view of the dump truck wherein the trailing axles are shown in phantom lines while being deployed from their stowed condition and then established in their deployed condition shown in solid lines.

FIG. **4** is a side view of the dump truck with the trailing axles in their stowed condition on the dump body of the truck and with the dump body tilted and the tailgate of the dump body open for dumping a load.

FIG. **5** is view taken along the lines **5-5** in FIG. **3** when looking in the direction of the arrows.

FIG. **6** is a perspective view of a portion of the dual trailing axle suspension system with the trailing axles in their stowed condition on the dump body.

FIG. **7** is a perspective view of the dual trailing axle suspension system.

FIG. **8** is a partially-exploded perspective view of the dual trailing axle suspension system.

FIG. **9** is a perspective view of the underside of the trailing axle suspensions.

FIG. **10** is an enlarged overhead view of the dual trailing axle suspension system.

FIG. **11** is an enlarged view taken along the lines **11-11** in FIG. **10** with certain near side components absent and with the trailing axles shown in their stowed condition in solid lines and in their fully deployed condition in phantom lines with respect to an auxiliary chassis from which the trailing axles are directly suspended.

FIG. **12** is an enlarged view taken along the lines **12-12** in FIG. **10** when looking in the direction of the arrows and includes a schematic of the control system controlling the

positioning of the auxiliary chassis with respect to a carriage employed in the dual trailing axle suspension system.

FIG. **13** is a schematic of the control system controlling the dual trailing axle suspension system apart from that provided by the control system in FIG. **12**.

FIGS. **14-17** are side views of the dump truck with the trailing axles deployed and while the trailing axles are traveling on sections of a road surfaces at elevations different from that being traveled by the primary axles supporting the truck.

FIG. **18** is a view like FIG. **6** wherein the auxiliary chassis is fixed to the carriage.

FIG. **19** is a side view of the auxiliary chassis wherein the two trailing axles are suspended from the chassis with leaf spring suspension systems.

FIG. **20** is a view taken along the lines **20-20** in FIG. **19** when looking in the direction of the arrows.

DESCRIPTION OF EXEMPLARY EMBODIMENTS

The present invention is shown as applied to a dedicated load-carrying motor vehicle in the form of a dump truck **10** having a cab **12** that serves as a vehicle operator and passenger compartment and a tiltable dump body **14** that serves as a load container and has a latchable top-hinged tail gate **16** for releasing a load when the dump body is tilted. With the cab **12** and tiltable dump body **14** mounted on a chassis **18** in a conventional manner and the truck chassis in turn supported on a road surface **20** by both primary axles and deployable auxiliary axles that are available to help support the truck chassis. With the primary axles consisting of a forwardly-located front axle **22** with steerable wheels **24** at its outboard ends under the control of the vehicle operator and rearwardly-located powered tandem axles **26**A and **26**B with dual wheels **28**A and **28**B respectively at their outboard ends. And with the auxiliary axles comprising a pair of trailing axles **30**A and **30**B with wheels **32**A and **32**B respectively at their outboard ends.

Wherein the front axle **22** and powered tandem axles **26**A and **26**B are suspended in parallel relationship from laterally spaced locations on the truck chassis **18**. With the front axle **22** located under a front end portion of the truck chassis and the powered tandem axles **26**A and **26**B located under a rear end potion of the truck chassis and dump body **14**. And with the tandem axles **26**A and **26**B and thus their wheels **28**A and **28**B powered by a power train of a suitable conventional type that includes an engine and transmission (not shown) that are controlled from the cab by the vehicle operator. And wherein the suspension systems suspending the primary axles from the Muck chassis **18** are of a conventional type and of which only a portion of the tandem axles' suspension system **34** is shown and is of the rocking-beam type.

Turning now to the trailing axles **30**A and **30**B, they are suspended from the dump body **14** and thereby from the truck chassis **18** by a dual trailing axle suspension system **36** according to the present invention as adapted to the dump truck and generally comprising an auxiliary chassis **38** from which the trailing axles **30**A and **30**B are directly suspended, a carriage **40**, a pair of suspension arms **42**, and a pair of hydraulically-operated actuators **44**. Wherein the auxiliary chassis **38** for clearance purposes with respect to the tailgate **16** when stowing and deploying the trailing axles **30**A and **30**B as descried later is slidably guided and retained on the underside of the carriage **40** by a pair of straight parallel guide rails **46** of U-channel shape that are rigidly fixed to the bottom side of the carriage **40** and slidably receive straight parallel guide members **48** of square tubular shape that are rigidly fixed to a box **49** of rectangular shape that is rigidly fixed to the upper side of the auxiliary chassis **38**. See FIGS. **6-8**, **11** and **12**. And wherein the auxiliary chassis **38** is positioned under the carriage **40** with the guidance of the guide rails **46** and guide members **48** by a pneumatically-operated actuator **50** comprising a cylinder **52** and piston-operated rod **54** as shown in FIGS. **6** and **8** with the top part **56** of the carriage removed. And wherein the cylinder **52** is fixed to the carriage **40** and the piston rod **54** is connected at its operating end with a bracket **58** to the upper side of the rectangular box **49** and thereby to the auxiliary chassis **38**.

Referring to FIG. **12**, the operation of the actuator **50** is controlled by a pneumatic circuit **60** that along with other pneumatically-operated components in the dual trailing axle suspension system later described is supplied by an air tank (AT) **62**. And wherein air is supplied to the air tank **62** according to demand by an engine-driven air compressor (not shown) and maintained at a regulated pressure in a conventional manner suited to meet the needs of the dual trailing axle suspension system as well as other pneumatically-operated vehicle components such as air brakes. And for the operation of the actuator **50**, there is provided a chassis-retracting valve (CRV) **64**, an exhaust valve (EV) **66**, a chassis-extending valve (CEV) **68**, an exhaust valve (EV) **70**, and a master control valve center (MCVC) **72** that operates these valves under the command of the vehicle operator from a central command module (CCM) **74** located in the cab **12**. Wherein the above valves are of a conventional electronically-operated type with the exhaust valve **66** when opened exhausting the air pressure downstream of the chassis-retracting valve (CRV) **64** to the atmosphere (ATM) and the exhaust valve **70** when opened exhausting the air pressure downstream of the chassis-extending valve (CEV) **68** to the atmosphere (ATM).

And with the chassis-retracting valve (CRV) **64** opened and the exhaust valve (EV) **66** closed and the chassis-extending valve (CEV) **68** closed and the exhaust valve (EV) **70** opened by the MCVC **72** under vehicle operator control at the CCM **74**, the auxiliary chassis **38** is positioned relative to the carriage **40** by the actuator **50** in a fully-retracted position as shown in FIG. **2** for deployment of the trailing axles **26**A and **26**B from the stowed condition as further described later. And with the chassis-extending valve (CEV) **68** and exhaust valve (EV) **66** opened and the chassis-retracting valve (CRV) **64** and exhaust valve (EV) **70** closed by the MCVC **72** under operator control at the CCM **74**, the auxiliary chassis **38** is positioned relative to the carriage **40** by the actuator **50** in a fully-extended position as shown in FIGS. **1** and **4** such that the rear-most trailing axle wheels **32**B are clear of the operation of the tail gate **16** as further describer later.

Continuing on with the trailing axles **30**A and **30**B, they are separately directly suspended in parallel relationship at laterally-spaced locations from the frame **76** of the auxiliary chassis **38** by matching axle suspensions **78**A and **78**B respectively. And the trailing axle wheels **32**A and **32**B are mounted on the ends of the trailing axles **30**A and **30**B with steering knuckles **80**A and **80**B respectively that establish the wheels with a suitable positive caster angle and have steering arms **82**A and **82**B that are connected by tie rods **84**A and **84**B respectively that provide the wheels with a suitable toe-in and with the thus interconnected trailing axle wheels stabilized and returned to a normal condition by coil spring/shock absorber assemblies **85**A and **85**B like that in U.S. Pat. No. 7,775,308 following forced steerage in reaction to the steered turning movement of the truck. Whereby

the trailing axle wheels **32**A and **32**B with the trailing axles deployed in their active condition are enabled to align with forward and rearward truck movement as shown in solid lines in FIG. **5** and self-steer in the direction of forward and reverse turning movement of the truck as shown in phantom lines in FIG. **5**. In addition, it will be observed that the arrangement of the trailing axles **30**A and **30**B locates their respective wheels **32**A and **32**B in alignment with the sides of the dump body **14** as shown in FIG. **5** so that the trailing axle wheels can thereby track and provide for firmly stowing of the auxiliary chassis **38** with the trailing axles **30**A and **30**B on top of the dump body sides as shown in FIGS. **1**, **4** and **6** and further described later.

Continuing on with the separate axle suspensions **78**A and **78**B, they each comprise a pair of parallel arms **86**A and **86**B of equal length that are pivotally connected at one end by pivot pins **88**A and **88**B to the auxiliary chassis frame **76** and pivotally connected at the other end by pivot pins **90**A and **90**B to the respective trailing axles **30**A and **30**B inboard of the steering knuckle at this end of the axles. See FIG. **11**. And for controlling movement of the thus suspended trailing axles **30**A and **30**B, there is provided a matching pair of pneumatically-operated actuators **92**A and **92**B of the elastomeric-bag type and a matching pair of air springs **94**A and **9413** that are also of the elastomeric-bag type. Wherein the actuators **92**A and **92**B are pivotally connected at one end to the auxiliary chassis frame **76** with the lower pivot pins **88**A and **88**B inward of and adjacent the pivotal connection of the lower suspension arms **86**A and **86**B respectively with the auxiliary chassis frame and are pivotally connected at their other end to the trailing axles **30**A and **30**B with the upper pivot pins **90**A and **90**B inward of and adjacent the pivotal connection of the upper suspension arms **86**A and **86**B respectively with the respective trailing axles. Whereby the actuators **92**A and **92**B act in an angular manner between the auxiliary chassis **38** and the trailing axles **30**A and **30**B in effecting axle movement for stowage. Whereas the air springs **94**A and **94**B are mounted to act in a substantially upright manner between the respective trailing axles **30**A and **30**B and the auxiliary chassis **38** in providing spring action isolating road induced axle movement from the auxiliary chassis. And the actuators **92**A and **92**B when supplied with air pressure while the air springs **94**A and **94**B are exhausted of air pressure raise and thereby stow the trailing axles **30**A and **30**B with respect to the auxiliary chassis **38** as shown in solid lines in FIG. **11**. And the air springs **94**A and **94**B when supplied with a controllable air pressure while the actuators **92**A and **92**B are exhausted of air pressure lower and thereby deploy the trailing axles **30**A and **30**B with respect to the auxiliary chassis **38** and establish the trailing axles in a fully deployed active condition as shown in phantom lines in FIG. **11**.

Referring now to FIG. **13**, the operation of the pneumatically-operated actuators **92**A and **92**B and air springs **94**A and **94**B is controlled by a pneumatic circuit **96** that is supplied by the air tank (AT) **62**. And for the operation of the actuators **92**A separate from the actuators **92**B, there is provided an axle stowing/raising valve (SV) **100** and exhaust valve (EV) **102** that provide for pressurizing the actuators **92**A with tank pressure and thereby raising the trailing axle **30**A to its stowed position with respect to the auxiliary chassis **38** shown in solid lines in FIG. **11** provided the air springs **94**A are not pressurized. With the axle stowing/raising valve (SV) **100** and exhaust valve (EV) **102** also providing for exhausting the actuators **92**A of air pressure to allow unimpeded action by the air springs **94**A to deploy the trailing axle **30**A from the auxiliary chassis **38** when they are pressurized. And for the operation of the actuators **92**B separate from the actuators **92**A, there is provided an axle stowing/raising valve (SV) **104** and exhaust valve (EV) **106** that provide for pressurizing the actuators **92**B with tank pressure and thereby raising the trailing axle **30**B to its stowed position with respect to the auxiliary chassis **38** shown in solid lines in FIG. **11** provided the air springs **94**B are not pressurized. With the axle stowing/raising valve (SV) **104** and exhaust valve (EV) **106** also providing for exhausting the actuators **92**B of air pressure to allow unimpeded action of the air springs **94**B to deploy the trailing axle **30**B from the auxiliary chassis **38** when they are pressurized.

And for the operation of the air springs **94**A separate from the air springs **94**B, there is provided a regulator valve (RV) **108** for regulating the air pressure supplied to the air springs **94**A, a pressure sensor (PS) **110** that senses the regulated air pressure and provides feedback for controlling the operation of the regulator valve (RV) **108** in providing the desired pressure for the functioning of the air springs **94**A and indication of the pressure presently acting in the air springs **94**A, an axle deploying/lowering valve (DV) **112** and associated exhaust valve (EV) **114** that provide for establishing this air pressure in the air springs **94**A and thereby deploying/lowering the trailing axle **30**A with respect to the auxiliary chassis **38** using the pressure determined by the pressure regulator valve (RV) **108**. With the exhaust valve (EV) **114** also providing for exhausting the air springs **94**A of pressure to allow the pneumatically-operated actuators **92**A when pressurized to forcibly raise the trailing axle **30**A to its stowed position with respect to the auxiliary chassis **38** as shown in solid lines in FIG. **11**. And for the operation of the air springs **94**B separate from the air springs **94**A, there is provided a regulator valve (RV) **116** for regulating the air pressure to operate the air springs **94**B, a pressure sensor (PS) **118** that senses the regulated air pressure and provides feedback for controlling the operation of the regulator valve (RV) **116** in providing the desired pressure for the functioning of the air springs **94**B and indication of the pressure presently acting in the air springs **94**B, and an axle deploying/lowering valve (DV) **120** and associated exhaust valve (EV) **122** that provide for establishing this air pressure in the air springs **94**B and thereby deploying/lowering the trailing axle **30**B with respect to the auxiliary chassis **38**. With the exhaust valve (EV) **122** also providing for exhausting the air springs **94**B of pressure to allow the pneumatically-operated actuators **92**B when pressurized to forcibly raise the trailing axle **30**B to its stowed position with respect to the auxiliary chassis **38** as shown in solid lines in FIG. **11**.

The valves in the pneumatic circuit **96** are of a conventional electrically-operated type, are interconnected as shown and like the pneumatic circuit **60**, the valves are controlled by the MCVC **72** that is under the command of the CCM **74** at the direction of the vehicle operator. And with the regulator valves (RV) **108** and (RV) **116** being operable to regulate the air pressure supplied to the respective air springs **94**A and **94**B in accordance with controlled voltage input.

Continuing on with the remaining dual trailing axle suspension system components, the carriage **40** and thereby the auxiliary chassis **38** with the trailing axles **30**A and **30**B are suspended from the dump body **14** and thereby from the truck chassis **18** by the suspension arms **42** and hydraulically-operated actuators **44** that are located to clear the sides of the dump body **14** and arc connected with the truck body **14** and thereby with the truck chassis **18** in a reinforced manner by suspension support members **124** that are fixed to

the outboard side of a rear end-portion of the truck body. Describing first the suspension arms **42**, they are pivotally connected at one end by a pivot pin **126** to a lower end portion of the respective support members **124** to swing about an axis parallel to the primary axles, are rigidly joined together at their other end by a cross-member **128**, and are pivotally connected adjacent the cross-member **128** with the ends of a laterally extending tubular shaft **130** by which the carriage **40** and thereby the auxiliary chassis **38** is supported by the suspension arms **42** for pivotal movement. With such pivotal support being provided by the ends of the shaft **130** being supported with flange bearings **132** that are mounted in a reinforced U-shaped channel portion **134** of the suspension arms **42**. See FIGS. **6**, **7**, **8** and **10**.

Completing the connection of the suspension arms **42** with the carriage **40** and thereby the auxiliary chassis **38**, the auxiliary chassis supporting shaft **130** is received along a mid-portion thereof by a pair of reinforcing tubular sleeves **136** that are welded to the shaft **130** and to bracing structure of the carriage **40** to thereby provide for rigid support of the auxiliary chassis supporting shaft **130** in a fixed position on the carriage. See FIGS. **6** and **8** with the top part **56** of the carriage **40** removed to expose the interior. And wherein the shaft **130** is located on the carriage **40** parallel to the axis about which the suspensions arms **42** can swing and thus parallel to the primary axles **22**, **26**A and **26**B and thereby locates the trailing axles **30**A and **30**B parallel with the primary axles while the carriage **40** and thereby the auxiliary chassis **40** are allowed to pivot relative to the suspension arms **42** as further described later. Moreover, the carriage-mounted auxiliary chassis supporting shaft **130** that is acted on by the hydraulically-operated actuators **44** via the suspension arms **42** as further described below is located above and substantially midway between the trailing axles **30**A and **30**B throughout the range of their movement relative to the auxiliary chassis **38**.

Turning now to the hydraulically-operated actuators **44**, they are like those in U.S. Pat. No. 7,775,308 wherein they comprise a cylinder **138** and piston **140** and incorporate a gas spring **142**. With the gas springs **142** each comprising a piston **144** that is slidably received in the related actuator piston **140** and is acted on at one end by the hydraulic pressure acting on the actuator piston and is acted on at the other end by gas pressure at a prescribed charge pressure that is made available in adequate supply to both gas springs **142** by a gas pressure accumulator tank **146**. See FIG. **13**. And with the gas preferably being nitrogen for system compatibility and the charge pressure determined for the intended gas spring operation described later.

Continuing on with the employment of the hydraulically-operated actuators **44**, their cylinders **138** are pivotally connected at their closed end by a pivot pin **148** to the respective suspension support members **124** at a location above the respective pivotal connections of the suspension arms **42** with these support members. And the actuator pistons **140** are pivotally connected at their operating end within and to the channel portion **134** of the suspension arms **42** by a pivot pin **150** at a relatively short distance from where the suspension arms **42** are pivotally connected with the auxiliary chassis supporting shaft **130** that is fixed to the carriage. Whereby the trailing axles **30**A and **30**B are also located and maintained by the actuators **44** in parallel relationship with the primary axles **22**, **26**A and **26**B and from a higher location on the suspension support members **124** and thus in a significant trussing manner when the trailing axles are deployed with the actuators **44** extended. Moreover, the trailing axles **30**A and **30**B are located with their axle suspensions **78**A and **78**B at opposite sides of the pivotal axis of the carriage **40** and auxiliary chassis **38** provided by the auxiliary chassis supporting shaft **130** when the trailing axles are deployed so that the force provided by the actuators **44** on the shaft **130** is located substantially midway between the trailing axles throughout their range of movement relative to the auxiliary chassis **38** and thereby resists the action of both of the air springs **94**A and **94**B in a substantially balanced structural manner in causing the auxiliary chassis to help support the truck chassis **18** as further described later. While the actuator gas springs **142** and trailing axle suspension air springs **94**A and **94**B are available to allow the trailing axles **30**A and **30**B to adjust to differences in elevation when the trailing axle wheels **32**A and **32**B are supported by a road surface at one elevation and the primary axle wheels **24**, **28**A and **28**B are supported by the road surface at a different elevation as further described later.

Referring again to FIG. **13**, the operation of the hydraulically-operated actuators **44** is provided by a hydraulic circuit **152** comprising a vented liquid tank (LT) **154** containing hydraulic fluid, a hydraulic pump (P) **156** that is supplied with the hydraulic fluid in the tank **154** and operates on demand to deliver the hydraulic fluid to a manifold (M) **158**, a controllable hydraulic pressure regulator valve (RV) **160** that returns excess hydraulic fluid at the manifold to the tank in regulating the pressure being supplied for actuator operation, a pressure sensor (PS) **162** that provides feedback for controlling the operation of the regulator valve **160** in providing the desired operating pressure for the actuators **44**, an axle-stowing valve (SV) **164** and exhaust valve (EV) **166** providing for actuator retraction, and an axle-deploying valve (DV) **168** and exhaust valve (EV) **170** providing for actuator extension. And wherein the valves in the hydraulic circuit **152** are of a conventional electrically-operated type with the pressure regulator valve **160** being operable to vary the hydraulic pressure supplied to the actuators **44** in accordance with a controlled voltage input. And wherein the components in the hydraulic circuit **152** are interconnected as shown and controlled with the MCVC **72** that is under the command of the CCM **74**.

Describing now a typical sequence of vehicle operator directed operation of the dual trailing axle suspension system **36** via the CCM **74** and MCVC **72** and starting with establishing the trailing axles **30**A and **30**B in their stowed condition shown in FIG. **1**, this condition can be established at any time with the pneumatic circuits **60** and **96** and the hydraulic circuit **152**. Wherein the trailing axles **30**A and **30**B are stowed with respect to the auxiliary chassis **38** by the pneumatic circuit **96** by (A) opening the axle-stowing valves (SV) **100** and (SV) **104** and closing the exhaust valves (EV) **102** and (EV) **106** serving the respective pneumatically-operated actuators **92**A and **92**B, and (**13**) closing the axle-deploying valves (DV) **112** and (DV) **120** and opening the exhaust valves (EV) **114** and (EV) **122** serving the respective air springs **94**A and **94**B. And with the trailing axles **30**A and **30**B thereby stowed with respect to the auxiliary chassis **38** in a tucked compact manner, the auxiliary chassis is located in its retracted condition with respect to the carriage **40** by the pneumatic circuit **60** by (A) opening the chassis-retracting valve (CRV) **64** and exhaust valve (EV) **70**, and (B) closing the chassis-extending valve (CEV) **68** and exhaust valve (EV) **66** serving the pneumatically-operated actuator **50**. Following the above operations and with the hydraulically-operated actuators **44** for example extended as shown in solid lines in FIG. **3** in fully deploying the trailing axles **30**A and **30**B, the carriage **40**

and auxiliary chassis **38** are raised with the actuators **44** by the hydraulic circuit **152** by (A) opening stowing valve (SV) **164** and closing exhaust (EV) valve **166**, (B) closing deploying valve (DV) **168** and opening exhaust valve (EV) **170**, and (C) setting the actuator operating pressure to a prescribed pressure with the regulator valve (RV) **160** that results in the actuators **44** then retracting but only to the extent shown in FIG. **1** for the purpose of stowing the trailing axles. And wherein the carriage **40** and auxiliary chassis **38** during the raising thereof effected by the actuators **44** as the latter retract to the prescribed limited extent are maintained in a substantially upright condition by the force of gravity acting thereon and their pivotal support by the suspension arms **42** that is provided by the auxiliary chassis supporting shaft **130**. Whereby the actuators **44** on such limited hydraulic actuator retraction locate the carriage **40** and trailing axle chassis **38** above the dump body **14** and thus the truck chassis **18** and in a substantially upright condition with the rear end of the trailing axle chassis closely adjacent the upper end of the tail gate **16** and the trailing axle wheels **32**A and **32**B above the top edge **172** of the longitudinally extending sides of the dump body.

With the above established location of the trailing axle wheels **32**A and **32**B, the auxiliary chassis **38** is then extended by the pneumatically-operated actuator **50** with the pneumatic circuit **60** by (A) closing the chassis-retracting valve (CRV) **64** and exhaust valve (EV) **70** and (B) opening the chassis-extending valve (CEV) **68** and exhaust valve (EV) **66**. Thereby positioning the auxiliary chassis **38** so that the rear trailing axle wheels **32**B do not interfere with the pivotal movement of the tail gate **16** during subsequent opening and closing. Where after both of the trailing axles **30**A and **30**B are lowered forcing the trailing axle wheels **32**A and **32**B downward against the top edge **172** of the dump body sides to thereby firmly hold the carriage **40** and auxiliary chassis **38** and thus the trailing axles in a stowed condition that stabilizes this entire assembly from movement on the truck when the truck is moving and also when dumping a load. With this holding action accomplished with the pneumatic circuit **96** by (A) closing the axle-stowing valves (SV) **100** and (SV) **104** and opening the exhaust valves (EV) **102** and (EV) **106** serving the respective pneumatically-operated actuators **92**A and **92**B, (B) opening the axle-deploying valves (DV) **112** and (DV) **120** and closing the exhaust valves (EV) **114** and (EV) **122** serving the respective air springs **94**A and **94**B, and (C) establishing with the regulator valves (RV) **108** and (RV) **116**) the air pressure then supplied to the respective air springs **94**A and **94**B at a relatively low pressure compared to that provided for forced trailing axle support of the truck chassis **18**. And with this holding action accomplished with the assistance of the cross-member **128** by being strategically positioned to engage the top **56** of the carriage **40** to prevent the carriage and thereby the auxiliary chassis **38** from pivoting about the auxiliary chassis supporting shaft **130** in the clockwise direction as viewed in FIG. **1** in reaction to the downward force then being applied on the trailing axles **30**A and **30**B by the air springs **94**A and **94**B at the low air pressure. And alternatively, the holding of the carriage **40** and auxiliary chassis **38** firmly in place in their stowed condition is also accomplished with the assistance of the cross-member **128** using only the forwardly-located air springs **94**A wherein these air springs are supplied with a suitable air pressure while exhausting the rearwardly-located air springs **94**B.

Then when a load is added to the dump truck **10** and there is recognized that certain trailing axle use is warranted such as that recommended by the axle load monitoring system disclosed in U.S. patent application Ser. No. 14/803,048 entitled "AXLE LOAD MONITORING SYSTEM", the vehicle operator can deploy the trailing axles **30**A and **30**B via the CCM **74** and MCVC **72** by releasing the holding of the carriage **40** and auxiliary chassis **38** with the pneumatic circuit **96**. And then retracting the auxiliary chassis **38** with respect to the carriage **40** with the pneumatic circuit **60** by (A) opening the chassis-retracting valve (CRV) **64** and exhaust valve (EV) **70**, and (B) closing the chassis-extending valve (CEV) **68** and exhaust valve (EV) **66**. Whereby the auxiliary chassis **38** is positioned as shown in FIG. **2** with the trailing axles **30**A and **30**B and their wheels **32**A and **32**B located in their stowed condition on the auxiliary chassis to pass without interference over the upper rear end of the dump body **14** and the top of the tail gate **16** and with the trailing axles then positioned with respect to the carriage **40** to help support the truck chassis **18** with eventual operation of the air springs **94**A and **94**B.

Continuing on with the deployment of the trailing axles **30**A and **30**B, the vehicle operator acting through the CCM **74** and MCVC **72** then effects full extension of the actuators **44** from their condition shown in FIG. **2** and thereby lowering of the carriage **40** and auxiliary chassis **38** and thus the trailing axles. Wherein during such lowering/deploying, the carriage **40** and auxiliary chassis **38** pass through the position shown in phantom lines in FIG. **3** and eventually locate in their fully deployed condition shown in solid lines in FIG. **3**. And wherein the carriage **40** and auxiliary chassis **38** have maintained an upright position throughout their lowering by virtue of gravity and their pivotal support by the suspension arms **42** provided by the auxiliary chassis supporting shaft **130** and with the suspensions arms **42** on the full extension of the actuators **44** then positioned substantially parallel to the road surface **20** and held there by the actuators **44**.

Continuing on with the deployment of the trailing axles **30**A and **30**B, the vehicle operator acting through the CCM **74** and MCVC **72** then closes the axle-stowing valves (SV) **100** and (SV) **104** and opens the exhaust valves (EV) **102** and (EV) **106** serving the respective pneumatically-operated actuators **92**A and **92**B, and (B) opens the axle-deploying valves (DV) **112** and (DV) **120** and closes the exhaust valves (EV) **114** and (EV) **122** serving the respective air springs **94**A and **94**B thereby deploying the trailing axles for their supporting role in helping to support the truck chassis **18** with the auxiliary chassis **38**. Wherein with the trailing axles **30**A and **30**B thus deployed for action, the hydraulically-operated actuators **44** then provide a resisting force with the controllable hydraulic pressure that acts on the auxiliary chassis **38** at a location substantially midway between the trailing axles **30**A and **30**B preventing upward auxiliary chassis movement enabling the air springs **94**A and **94**B and thereby the auxiliary chassis **38** to help support the truck chassis **18** to a variable degree determined by the air pressure being supplied. And wherein the resisting force acting on the auxiliary chassis **38** provided by the hydraulically-operated actuators **44** as noted previously is applied at its pivotal support on the suspension arms **42** provided by the auxiliary chassis supporting shaft **130** and thereby at a location on the auxiliary chassis **38** between the trailing axles **30**A and **30**B throughout their operating range of movement relative to the auxiliary chassis in helping to support the truck chassis **18** with the auxiliary chassis **38** and to the degree/extent determined by the air pressure supplied to the trailing axle air springs **94**A and **94**B by their separate control circuits that provide flexibility in addressing the various circumstances that can exist.

For example, when the trailing axles **30**A and **30**B are not bearing equal weight as the result of the external load on the auxiliary axles including their weight, the weight distribution of the auxiliary chassis and the remainder of the dual trailing axle assembly or any additional load placed on the auxiliary chassis that is not equally distributed to the two axles, the trailing axle bearing more weight will then require more lift force. And if the trailing axle air springs **94**A and **94**B are functionally equivalent and the same air pressure is applied to both, the result will be the axle with greater weight will have its air springs more compressed than the other axle since the air springs increase lift force as they are compressed and decrease lift force as they are extended. And this would undesirably result in the auxiliary chassis **38** being angled relative to the road (not level) and with the degree of the angle being proportional to the difference in weight acting on the trailing axles. But with the control circuits for the air spring **94**A and **94**B being separate, higher air pressure can be applied to the air springs at the trailing axle bearing more weight so that the air springs at both of the trailing axles are at the same ride height but provide different lift force. Furthermore, when equal lift force is desired by the trailing axles and their air springs are not the same, they may not be equal in reacting to the air spring force being applied whereby equal air pressure does not equate to equal down force and as a result, one trailing axle may require higher air spring pressure than the other to achieve the same lift force. Moreover, by providing independent control circuits for the air springs **94**A and **94**B, the dual trailing axle system according to the present invention lends itself to controlling the lift force on the two trailing axles in a manner that provides improved vehicle handling as well as controlling the operation of the trailing axles **30**A and **30**B automatically with a control system like that in U.S. patent application Ser. No. 14/803,045 entitled "AUTOMATIC AUXILIARY AXLE CONTROL SYSTEM".

Continuing on with the operation of the dual trailing axle suspension system **36** with the auxiliary chassis **38** continuing to help support the truck chassis **18**, the trailing axle wheels **32**A and **32**B at one side or both sides of the auxiliary chassis **38** while traveling over a bump in the road surface are allowed to travel up and down reaction in reaction thereto until the trailing axle air springs **94**A and **94**B are fully compressed and then allowed to continue to travel upward if necessary because of the height of the bump and to the extent allowed of the carriage **40** and auxiliary chassis **38** provided by the actuator gas springs **142** in allowing road-induced retraction of the actuators **44** to accommodate such extended upward travel of the trailing axles. On the other hand, the trailing axles **30**A and **30**B continue to help support the truck chassis **18** while the trailing axle wheels **32**A and **32**B at one side or both sides of the auxiliary chassis **38** sequentially travel over a depression such as a pothole in the road surface. And in that case the trailing axles **30**A and **30**B maintain their support of the truck chassis **18** until the trailing axle air springs **94**A and **94**B are fully extended and thereby limit further downward trailing axle movement.

Apart from bumps and depressions in the road surface, there can occur significant differences in elevation between the road surface supporting the primary axles **24**, **26**A and **26**B and that supporting the trailing axles **30**A and **30**B wherein the trailing axles will continue to help in supporting the truck chassis **18**. For example, in the road situation shown in FIG. **14** with the actuators **44** remaining extended in holding the position of the suspension arms **42** relative to the truck chassis **18**, the trailing axles **30**A and **30**B are shown traveling on an upwardly inclined section **20**A in the road surface **20** behind the primary axles **22**, **26**A and **26**B. Resulting in the trailing axles **30**A and **30**B then being at significantly different elevations below that of the primary axles and forcing the auxiliary chassis **38** to pivot on the suspension arms **42** in the clockwise direction enabled by the shaft **130** and assume the same angle as the road section **20**A and thereby adjust thereto. Whereby the trailing axle wheels **32**A and **32**B with the action of the air springs **94**A and **94**B have remained in forced contact with the road section **20**A and the trailing axles **30**A and **30**B continue to help in supporting the truck chassis **18** and with the ability of the dual trailing axle suspension system **36** to accommodate steeper inclines behind the primary axles until the air springs **94**A and **94**B when fully extended loose road contact.

And by further example in the road situation shown in FIG. **15** with the actuators **44** remaining extended in holding the position of the suspension arms **42** relative to the truck chassis **18**, the trailing axles **30**A and **30**B are shown traveling on a level section **20**B in the road surface **20** that is behind and below that at the primary axles **22**, **26**A and **26**B. And the air springs **94**A and **94**B have forced the trailing axles **30**A and **30**B downward without accompanying pivotal movement of the auxiliary chassis **38** relative to the suspension arms **42**. Whereby the trailing axle wheels **32**A and **32**B have remained in forced contact with the road surface with the down force applied by the air springs **94**A and **94**B and continue in helping to support the truck chassis **18** and with the ability of the dual trailing axles suspension system **36** to accommodate larger elevation differences of this kind to the extent enabled by the air springs **94**A and **94**B.

Referring now to the road situation shown in FIG. **16**, the trailing axles **30**A and **30**B are shown traveling on a downwardly inclined section **20**C in the road surface **20** that is behind the primary axles **22**, **26**A and **26**B and thereby requires location of the trailing axles at different elevations on the road section **20**C that are above the road elevation at the primary axles **22**, **26**A and **26**B and to an extent that is greater than that allowed by full compression of the trailing axle air springs **94**A and **94**B and accompanying forced pivoting of the auxiliary chassis **38** about the shaft **130** with respect to the suspension arms **42** in assuming the angle of this road section Which thus limits the ability of the trailing axles to continue to help support the truck chassis in this situation beyond that enabled by the air springs alone. And in accommodating this road situation, the trailing axle wheels **32**A and **32**B with their forced contact with the road section **20**C by the air springs **94**A and **94**B have effected forced retraction of the hydraulically-operated actuators **44** from their extended condition by the hydraulic fluid displacement enabled by the action of the actuator gas springs **142** thereby allowing the auxiliary chassis **38** to have raised with respect to the truck chassis **18** while the actuators **44** continue to provide resisting force on the auxiliary chassis enabling the forced loading of the trailing axles and the trailing axle wheels **32**A and **32**B having forced the auxiliary chassis to pivot in the counter-clockwise direction in assuming the same angle as the downwardly inclined road section **20**C and thereby adjust thereto. Whereby the trailing axle wheels **32**A and **32**B have remained in forced contact with the road section **20**C and the trailing axles **30**A and **30**B continue to help in supporting the truck chassis **18** under the action of the air springs **94**A and **94**B and with the ability of the dual trailing axle suspension system **36** to accommodate

steeper downwardly inclined road sections behind the primary axles to the extent enabled by the actuator gas springs **142**.

Referring now to the road situation shown in FIG. **17**, the trailing axles **30**A and **30**B are shown traveling on a level section **20**D in the road surface **20** that is behind and above the elevation of the road surface at the primary axles **22**, **26**A and **26**B. And like in the FIG. **14** road situation in accommodating this road situation, the hydraulically-operated actuators **44** have partially retracted from their extended condition allowed by the forced hydraulic displacement action enabled by the gas springs **142** while continuing to provide a resisting force enabling the loading of the trailing axles **32**A and **32**B with the air springs **94**A and **94**B with accompanying pivotal movement of the auxiliary chassis **38** relative to the suspension arms **42** in the clockwise direction while remaining upright. Whereby the trailing axles **30**A and **30**B are forced to continue in helping to support the truck chassis **18** on the level section **20**D and with the ability of the dual axles suspension system **36** to accommodate larger elevation differences of this kind to the extent enabled by the gas springs **142**.

In considering the different road situations that can be encountered including those that have been shown and described, the air springs **94**A and **94**B are like those generally used to provide lift force with both pusher axles and tag axles. And as these air springs compress, their diameter increases. As a result, when a constant air pressure is supplied to the air springs, the lift force produced by the air springs is least when they are fully extended and their diameters are minimized, and is greatest when they are fully compressed and their diameters are maximized. And for example and with reference to the different road situations shown in FIGS. **1** and **14-17**, if 40 psi air pressure is maintained in the air springs, then the maximum force with the these air springs fully compressed is capable of producing a total lift force of 22,000 pounds. And the hydraulic pressure forcing the extension of the actuators is determined so that the resisting force of the actuators is 22,000 pounds and thus the actuators will retract only when this force is exceeded and only when the air springs are fully compressed. With the result that lower elevations of the road surface at the trailing axle wheels **32**A and **32**B are accommodated by the full extension of the air springs **94**A and **94**B with the hydraulically-operated actuators remaining hydraulically rigid as shown in FIGS. **14** and **15** while higher elevations of the road surface at the trailing axle wheels are accommodated by compression of the air springs and subsequent retracting of the hydraulically-operated actuators provided by the action of the actuator gas springs **142** as shown in FIGS. **16** and **17**. And thus the lift force provided by the trailing axles **30**A and **30**B when the air springs **94**A and **94**B are maintained with constant pressure will vary as the truck travels over elevation changes in the road surface with the trailing axles providing less lift force when they are at lower elevations than the truck's primary axle wheels and greater lift force when the trailing axle wheels are at higher elevations than the truck's primary axle wheels. And if constant lift force by the trailing axles is desired throughout elevation changes, this can be provided in controlling the air pressure supplied in an appropriate manner during these transitional conditions.

Considering now an example of the dual trailing axle suspension system **36** utilizing commercially available trailing axles and air springs, the spacing provided between the trailing axles **30**A and **30**B is set at 40 inches and the distance provided from the rearmost primary axle **26**B to the midpoint between the trailing axles **30**A and **30**B when deployed is set at 12 feet. With this resulting in the distance from the rearmost primary axle **26**B to the forward most trailing axle **30**A being 10 feet-4 inches and to the rearmost trailing axle **30**B being 13 feet-8 inches. And using commercially available trailing axles **30**A and **30**B and air springs **94**A and **94**B with this dimensional arrangement, the dual trailing axle suspension system **36** is capable of allowing elevation changes of the trailing axles **30**A and **30**B of 16 inches below the truck's primary axles **22**, **26**A and **26**B and 20 inches above the primary axles. Resulting in the downward trailing axle travel limitation of 16 inches being more than sufficient for public roadways as such downward travel at 12 feet behind the truck is capable of handling road grade changes over 10 percent. And if more downward travel of the trailing axles **30**A and **30**B is desired, this can be provided in the selection of air springs suited to the desired tasks. On the other hand, the relative upward travel limitation of 20 inches allowed of the trailing axles **30**A and **30**B in this exemplary is dependent on the total volume of the gas accumulator portion of the gas springs **142** associated with the hydraulically-operated actuators **44**, the total volume of the hydraulic fluid within the actuators **44**, the volume of hydraulic fluid displaced when the actuators retract to allow such upward travel, and the maximum increase in the hydraulic pressure desired. And if more relative upward travel of the trailing axles **30**A and **30**B is desired, this can be obtained without increasing the hydraulic pressure by simply increasing the gas accumulator volume associated with the gas springs **142**.

Describing now the stowing of the trailing axles **30**A and **30**B following their use and with reference to FIG. **4**, the vehicle operator via the CCM **74** and MCVC **72** stows the trailing axles by reversing the sequential deploying operations previously described. And in their stowed condition with the auxiliary chassis **38** and carriage **40** firmly held in place by the air springs **94**A and **94**B pressing the trailing axle wheels **32**A and **32**B against the top edges **170** of the dump body **14** with the cooperation of the cross-member **128** that joins the suspension arms **42**, the dump body as shown in FIG. **18** is raised at its forward end from the truck chassis **18** by a pneumatically-operated lifting mechanism **171** to tilt the dump body and thereby provide for dumping a load with the opening of the tail gate **16**.

And having described the operation of the dual trailing axle suspension system **36** covering various road conditions that can be encountered, it will be appreciated that the resisting force acting on the auxiliary chassis **38** provided by the hydraulically-operated actuators **44** in enabling the air springs **94**A and **94**B to force the auxiliary chassis **38** to help support the truck chassis **18** is established and maintained at a location between the trailing axles **30**A and **30**B throughout their range of movement relative to the auxiliary chassis with such varying road conditions. Thereby providing for the net lifting force of the two trailing axles (the lifting force minus any external load including the axle's weight) to directly oppose the resisting force of the hydraulically-operated actuators and thereby be transferred to provide the intended auxiliary support. And if the location of the resisting force on the auxiliary chassis was not provided and maintained between the trailing axles throughout their range of movement relative to the auxiliary chassis, the trailing axles could not lift against the resistance of the hydraulically-operated actuators. And instead, the air springs acting on the trailing axles would extend to their maximum extent allowing the auxiliary chassis to pivot with the result that no lifting force would be applied to help support the motor

vehicle chassis. And wherein the forces and torques would balance only by the air springs becoming fully extended and the auxiliary chassis would then be pivoted to such a degree that only the wheels of one of the trailing axles would maintain contact with the road surface while the wheels of the other trailing axle would lose contact with the road surface.

Furthermore, by the dual trailing axle suspension system according to the present invention providing for substantially equal loading of the two trailing axles when the external loading of these two axles is substantially equal, if one of the trailing axles is closer to the pivot axis of the auxiliary chassis than the companion trailing axle, its moment arm is shorter and therefore it applies less torque about the axis than the companion trailing axle at any given force. And therefore, the trailing axle closer to the auxiliary chassis pivot axis must apply a greater lifting force than the companion trailing axle to balance the torques. And the amount of additional force required by the trailing axle that is closer to the auxiliary chassis pivot axis is directly proportional to how much closer it is to the axis thereby making it possible to readily determine how to proportion the loading of the trailing axles with their air springs in providing the desired vehicle support in a particularly advantageous manner. For example, if one of the auxiliary axles is 25 percent closer to the pivot axis of the auxiliary chassis, it will require 25 percent more net lifting force/air pressure than the companion trailing axle. And if the external loading of the two trailing axles (the weight that each bear apart from the air spring loading) is substantially equal, then the required lifting force of the two trailing axles and their air spring pressure will be substantially equal in providing the desired motor vehicle chassis support. Furthermore, if the two trailing axles are substantially identical in all respects, the air pressure applied to each axle's air springs will be substantially equal in obtaining the desired vehicle support.

Furthermore, the dual trailing axle suspension system according to the present invention provides for accommodating the widest possible range of external loading imbalance between the two trailing axles if an external load is placed on the auxiliary chassis, or the weight of the auxiliary chassis and trailing axles is not distributed equally to the two axles, and this results in one trailing axle bearing a weight that is significantly more than the other trailing axle. As the system can accommodate this to the maximum degree with either trailing axle bearing the greater load by virtue of the pivot axis of the auxiliary chassis always being located between the two trailing axles throughout their range of movement relative to the auxiliary chassis. And wherein the trailing axle bearing more weight will then need to apply a greater lifting force than the companion trailing axle that can be accomplished with the air pressure provided by its separate pneumatic circuit.

Furthermore, the dual trailing axle suspension system according to the present invention provides for maximizing the pivotal balancing capabilities of the trailing axle wheels when encountering elevation changes such as shown in FIGS. **14-17** and described above and the frictional forces from acceleration and braking. For example, when a bump, pothole, or other elevation change is encountered, the trailing axle wheels encountering the elevation change will experience a resultant force that is directed at forward or rearward angles relative to the normal force that is perpendicular the road surface. And when accelerating and braking, the friction induced force will be directed forward or rearward at the point where the trailing axle wheels contact the road surface. And in these instances, the air springs loading one of the trailing axles will compress thereby increasing its force while the air springs loading the companion trailing axle will extend thereby decreasing its force as necessary to balance the torques from these new and briefly encountered forces.

It will also be appreciated that other embodiments of the invention can take various forms and whether it is applied to a motor vehicle having powered tandem axles or only one powered axle. Or there may be no load container and depending on the accommodating space on a particular vehicle for stowing the dual trailing axles, there may be no need to provide for relative movement between the auxiliary chassis and carriage for clearance purposes during stowing and deploying of the trailing axles. In that case as shown in FIG. **18**, the auxiliary chassis **38** is for example rigidly fixed to the carriage **40** by a pair of spacer members **176** of square tubular shape that replace the guide rails **46**, guide members **48** and rectangular box **49** and permanently fix the auxiliary chassis to the carriage with their pivotal support on the suspension arms **42** positioned above and between the trailing axles **30**A and **30**B in the designated location for dual trailing axle operation described previously and with the pneumatically-operated actuator **50** eliminated absent the need for such.

In addition to the above manner of operation of the dual trailing axle suspension system **36**, it will also be appreciated that the air springs **94**A and **94**B can be maintained at a constant pressure thus providing the axle suspensions **78**A and **78**B with a set spring action instead of the variable spring action provided by varying the pressure in the air springs in determining the degree of help provided by the auxiliary chassis in supporting a motor vehicle chassis. And in that case the hydraulically-operated actuators **108** are operated to apply a force on the auxiliary chassis **38** forcing its downward movement against the air springs **94**A and **94**B in causing the auxiliary chassis to help support the truck chassis **18** to a variable degree. Instead of the actuators **108** providing a resisting force on the auxiliary chassis **38** and the pressure in the trailing axle air springs **94**A and **94**B being controlled to vary the support of the truck chassis provided by the auxiliary chassis as previously described.

Furthermore, the dual trailing axle suspension system according to the present invention can have the two axles suspended from the auxiliary chassis **38** with a wide range of axle suspensions having a set spring action in causing the auxiliary chassis **38** to help support the motor vehicle chassis **18** to a variable degree in essentially the same manner as the axle suspensions **78**A and **78**B when their air springs are provided with a set pressure as described above. For example, there is shown in FIGS. **19** and **20** another embodiment of the dual trailing axle suspension system according to the present invention that accomplishes the desired results with a set spring action provided by springs of the elastic type.

Wherein the auxiliary chassis **38** is now supported by trailing axles **178**A and **178** B with self-steering wheels **180**A and **180**B that are linked by tie rods **182**A and **182**B, stabilized with coil spring/shock absorber assemblies **184**A and **184**B and suspended from the auxiliary chassis **38** with elastic spring action by semi-elliptic leaf spring suspension systems **186**A and **186**B. With the suspension systems **186**A and **186**B comprising a pair of semi-elliptical leaf spring arrangements **188**A and **188**B extending longitudinally of the auxiliary chassis **38** between the respective trailing axles

178A and 178B and side members 76A of the frame 76 that are braced along their length by transverse cross-members 76B.

And in suspending the trailing axles 178A and 178B, the forward end of the longest and uppermost leaf spring in the leaf spring arrangements 188A are pivotally mounted on the lower side of the opposing frame side member 76A with pin and hanger assemblies 190A, the rearward end of the longest and uppermost leaf spring in the leaf spring arrangements 188B are pivotally mounted on the lower side of the opposing frame side member 76A with pin and hanger assemblies 190B, and a mid-portion of the leaf spring arrangements 188A and 188B is rigidly mounted on the upper side of the trailing axles 178A and 178B with bracket assemblies 192A and 192B respectively. And with the opposing ends of the longest and uppermost leaf spring in the leaf spring arrangements 188A and 188B mounted on the lower side of the opposing frame side member 76A with shackles 194A and 194B respectively that are pivotally connected at their lower end to the ends of a rocking link 196 that is pivotally supported with a pivot pin 198 by a bracket 200 fixed to the lower side of the opposing frame side member 76A.

And wherein the rocking link pivot pins 198 are located above and equidistant from the pivotal connections of the shackles 194A and 194B with the rocking link 196 and the shackles are oriented in a substantially vertical position as shown in FIG. 19 when the leaf spring arrangements 188A and 188B are compressed to substantially half of the extent allowed in establishing the mean ride height of the auxiliary chassis 38 when helping to support the truck chassis 18. And the trailing axles 178A and 178B are located by the semi-elliptic leaf spring suspension systems 186A and 186B so that the hydraulically-operated actuators 44 act on the carriage 40 and thereby the auxiliary chassis 38 at a location substantially midway between the trailing axles 178A and 178B throughout their range of movement relative to the auxiliary chassis in causing the auxiliary chassis to help support the truck to a variable degree by the hydraulically-operated actuators 44 forcing the auxiliary chassis 38 downward against the leaf spring suspension systems 186A and 186B. And wherein it will be understood that other suitable leaf spring suspensions could be arranged transversely of the auxiliary chassis or another form of elliptic-leaf springs employed or that other structural forms of springs such as coil springs and torsion bars could be employed. And with the objective of minimizing the extent of the control system for operating the dual trailing axle suspension system according to the present invention as implemented with various axle suspension systems.

It will also be appreciated that in the case of the two trailing axles 30A and 30B being suspended from the auxiliary chassis 38 with the air spring axle suspensions 78A and 78B, the air springs 94A and 94B without air pressure can be fully compressed with the pneumatically-operated actuators 92A and 92B to thereby minimize the overall height of the auxiliary chassis and trailing axles 30A and 30B in order to clear the tailgate 16 and dump body 14 as the suspension arms 42 are raised and lowered by the hydraulically-operated actuators 44 for stowage and deployment of the auxiliary chassis and thereby the trailing axles 30A and 30B. And in respect to stowage and once the suspension arms 42 are raised to the extent possible on full retraction of the actuators 44 and the auxiliary chassis 38 positioned above the dump body 14, the air springs 94A and 94B or only the air springs 94A can be pressurized forcing the trailing axle wheels 32A and 32B against the top edges 172 of the dump body 14 to thereby firmly hold the auxiliary chassis on the load container when the truck is in motion and when the load container is tilted to dump a load. And wherein the cross-member 128 extending between the suspension arms 42 prevents the carriage 40 and thereby the auxiliary chassis 38 from pivoting in reaction to the pressuring of the air springs.

And with regard to stowage and deployment of the trailing axles 178A and 178B wherein they are suspended from the auxiliary chassis 38 with the leaf spring suspension systems 186A and 186B, the trailing axles will be extended from the auxiliary chassis by the springs in these suspension systems to the maximum extent as the trailing axle wheels 180A and 180B are lifted from a road surface when the hydraulically-operated actuators 44 are retracted. And to compensate for this, the suspension arms 42 and hydraulically-operated actuators 44 are lengthened compared to that utilized with the pneumatically-operated actuators 92A and 92B and air springs 94A and 94 B such that the auxiliary chassis supporting shaft 130 is further distanced from the suspension arm pivot pins 126 to the extent necessary for the trailing axle wheels 180A and 180B to clear the top of the dump body 14 and tail gate 16 as the trailing axles pass over for stowage or deployment. And with the suspension arms 42 angled forward of vertical when the hydraulically-operated actuators 44 are fully retracted and the auxiliary chassis 38 is in the fully stowed position, the auxiliary chassis 38 moves downward toward the dump body after the suspension arms pass vertical in the stowage direction following further retraction of the hydraulically-operated actuators 44. With the trailing axle wheels 180A and 180B then making contact with the top edges 172 of the dump body 14 before the hydraulically-operated actuators 44 are fully retracted whereby the trailing axle suspension springs are compressed to firmly hold the trailing axle wheels against the top edges of the dump body and thereby hold the auxiliary chassis 38 in place on the dump body when the actuators are eventually fully retracted. And wherein the cross-member 128 extending between the suspension arms 42 prevents the carriage 40 and thereby the auxiliary chassis 38 from pivoting in reaction to the force being applied to compress these trailing axle springs in providing the holding action. And wherein the above sequence of events is reversed to deploy the trailing axles 178A and 178B with extension of the hydraulically-operated actuators 44.

It will also be appreciated that in addition to the above exemplary embodiments, the dual trailing axle suspension system according to the present invention is readily adaptable to a wide range of motor vehicles. For example, the motor vehicle can take various other forms such as refuse trucks, transit concrete mixing trucks, open-bed trucks, utility trucks, and military trucks. Wherein the motor vehicle may have only two primary axles with one of them powered and also one or more pusher axles and/or tag axles for auxiliary use. Or the motor vehicle may have three primary axles with two of them powered as well as one or more pusher axles and/or tag axles for auxiliary use. And the dual trailing axle suspension system is readily adaptable to accommodate such in the manner of operation described above with respect to stowing the auxiliary chassis and thereby the two trailing axles with respect to the particular motor vehicle.

In addition, it will be appreciated that actuators providing the intended operation of helping to support the motor vehicle chassis can be utilized that are not of the hydraulically-operated type shown and take other forms. Such as pneumatically-operated actuators and ball nut and screw actuators that are operated in a manner suited to the objec-

tives of the present invention. And it will also be appreciated that the trailer hitch latching mechanism can be released with a powered actuator rather than manually.

Furthermore, the gas springs that provide for extended upward travel of the trailing axles can have their piston arranged separate from the hydraulically-operated piston to operate in a likewise hydraulic and gas pressured manner and separately provided with a gas accumulator of adequate volume with the prescribed gas pressure charge instead of with a common gas accumulator that serves both of the actuator gas springs. Or the actuator gas springs can be dispensed with if the added trailing axle movement they provide is not called for. And instead of there being only dual trailing axles serving as the auxiliary axles, the motor vehicle may have one or more pusher axles and/or one or more tag axles for added vehicle support. And instead of a tiltable dump body serving as a load container, the load container could be fixed to the motor vehicle chassis and have a roof or a stowing platform for the dual trailing axles that is provided or the motor vehicle may have an open bed with no load container and the carriage and auxiliary chassis with the trailing axles would then be firmly held in the stowed condition on what is available or added. In addition, it will also be recognized that the force acting on the auxiliary chassis could also be located below as well above the trailing axles taking into account in the latter case the provision of adequate ground clearance.

And thus the scope of the invention is intended to be limited only by the accompanying claims.

The invention claimed is:

1. A dual trailing axle suspension system comprising

an auxiliary chassis,

two axles directly suspended from the auxiliary chassis with axle suspensions that provide spring action for isolating road-induced axle movement from the auxiliary chassis, and

an auxiliary chassis suspension adapted to suspend the auxiliary chassis from a chassis of a motor vehicle and deploy the auxiliary chassis from a stowed location on the motor vehicle to a deployed location located at a substantial distance behind the motor vehicle chassis and then cause the auxiliary chassis to help support the motor vehicle chassis to a variable degree by acting on the auxiliary chassis at a location substantially midway between the two axles in a manner determined by whether the spring action provided by the axle suspensions is set or variable.

2. A dual trailing axle suspension system as set forth in claim **1** wherein

the axle suspensions have air springs supplied with a controllable air pressure providing the spring action, and

the auxiliary chassis suspension is adapted to prevent upward auxiliary chassis movement by the air springs in causing the auxiliary chassis to help support the motor vehicle chassis.

3. A dual trailing axle suspension system as set forth in claim **1** wherein

the axle suspensions have air springs with a set air pressure providing the spring action, and

the auxiliary chassis suspension is adapted to force downward auxiliary chassis movement against the action of the air springs in causing the auxiliary chassis to help support the motor vehicle chassis.

4. A dual trailing axle suspension system as set forth in claim **1** wherein

the axle suspensions have elastic springs providing a set spring action, and

the auxiliary chassis suspension is adapted to force downward auxiliary chassis movement against the action of the springs in causing the auxiliary chassis to help support the motor vehicle chassis.

5. A dual trailing axle suspension system as set forth in claim **1** wherein

the auxiliary chassis suspension comprises a pair of actuators adapted to act on the auxiliary chassis in causing the auxiliary chassis to help support the motor vehicle chassis.

6. A dual trailing axle suspension system as set forth in claim **1** wherein

the auxiliary chassis suspension comprises a pair of hydraulically-operated actuators adapted to act on the auxiliary chassis in causing the auxiliary chassis to help support the motor vehicle chassis.

7. A dual trailing axle suspension system as set forth in claim **1** wherein

the auxiliary chassis suspension comprises a pair of suspension arms and a pair of actuators adapted to cooperatively suspend the auxiliary chassis from the motor vehicle chassis, and

the actuators are adapted to act on the auxiliary chassis in causing the auxiliary chassis to help support the motor vehicle chassis.

8. A dual trailing axle suspension system as set forth in claim **1** wherein

the auxiliary chassis suspension comprises a pair of suspension arms and a pair of hydraulically-operated actuators adapted to cooperatively suspend the auxiliary chassis from the motor vehicle chassis, and

the actuators are adapted to act on the auxiliary chassis in causing the auxiliary chassis to help support the motor vehicle chassis.

9. A dual trailing axle suspension system as set forth in claim **1** wherein

the auxiliary chassis suspension comprises a pair of suspension arms and a pair of actuators adapted to cooperatively suspend the auxiliary chassis from the motor vehicle chassis,

the auxiliary chassis is supported by the suspension arms for pivotal movement that places the auxiliary chassis in an upright condition when helping to support the motor vehicle chassis, and

the actuators are adapted to act on the auxiliary chassis while in the upright condition in causing the auxiliary chassis to help support the motor vehicle chassis.

10. A dual trailing axle suspension system as set forth in claim **1** wherein

the auxiliary chassis suspension comprises a pair of suspension arms and a pair of hydraulically-operated actuators adapted to cooperatively suspend the auxiliary chassis from the motor vehicle chassis,

the auxiliary chassis is supported by the suspension arms in a fixed position that places the auxiliary chassis in an upright condition when helping to support the motor vehicle chassis, and

the actuators are adapted to act on the auxiliary chassis while in the upright condition in causing the auxiliary chassis to help support the motor vehicle chassis.

11. A dual trailing axle suspension system as set forth in claim **1** wherein

the auxiliary chassis suspension comprises a pair of suspension arms and a pair of actuators adapted to cooperatively suspend the auxiliary chassis from the motor vehicle chassis,

the auxiliary chassis is supported by the suspension arms, and

the actuators are adapted to act on the auxiliary chassis via the suspension arms in causing the auxiliary chassis to help support the motor vehicle chassis.

12. A dual trailing axle suspension system as set forth in claim **1** wherein

the auxiliary chassis suspension comprises a pair of suspension arms and a pair of hydraulically-operated actuators adapted to cooperatively suspend the auxiliary chassis from the motor vehicle chassis,

the auxiliary chassis is supported by the suspension arms, and

the actuators are adapted to act on the auxiliary chassis via the suspension arms in causing the auxiliary chassis to help support the motor vehicle chassis.

13. A dual trailing axle suspension system as set forth in claim **1** wherein

the auxiliary chassis suspension comprises a pair of hydraulically-operated actuators adapted to act on the auxiliary chassis in causing the auxiliary chassis to help support the motor vehicle chassis, and

the auxiliary chassis suspension includes gas springs operatively associated with the actuators adapted to allow the actuators to accommodate limited upward movement of the auxiliary chassis beyond that allowed by the axle suspensions when the auxiliary chassis is traveling a road surface at an elevation higher than that of the motor vehicle chassis.

14. A dual trailing axle suspension system as set forth in claim **1** wherein

the axle suspensions have air springs controlled by separate pneumatic control circuits, and

the control circuits are adapted to supply air at a variable pressure and at a set pressure to the air springs.

15. A dual trailing axle suspension system as set forth in claim **1** wherein

the axle suspensions have air springs controlled by separate pneumatic control circuits,

the control circuits are adapted to supply air at a variable pressure and at a set pressure to the air springs, and

the axle suspensions have pneumatically-operated actuators adapted to stow the associated trailing axle under the auxiliary chassis.

16. A dual trailing axle suspension system as set forth in claim **1** wherein

the axle suspensions each comprise a pair of pneumatically-operated actuators and a pair of air springs,

the actuators are adapted to establish the associated axle in a retracted location under the auxiliary chassis when supplied with air pressure and the air springs associated with the axle are exhausted of air pressure to thereby compact the axles with respect to the auxiliary chassis, and

the air springs are adapted to extend the associated axle from the retracted location and provide the spring action associated therewith when the air springs are supplied with air pressure and the actuators associated with the axle are exhausted of air pressure.

17. A dual trailing axle suspension system as set forth in claim **1** wherein

the auxiliary chassis suspension comprises a pair of suspension arms, a pair of hydraulically-operated actuators and a carriage,

the suspension arms and actuators are adapted to cooperatively suspend the carriage from the motor vehicle chassis,

the auxiliary chassis is carried from overhead by the carriage,

the carriage is pivotally supported by the suspension arms and thereby pivotally supports the auxiliary chassis on the suspension arms, and

the auxiliary chassis is fixed to the carriage at a location that positions the auxiliary chassis to be acted on at the designated location by the actuators via the carriage.

18. A dual trailing axle suspension system as set forth in claim **1** wherein

the auxiliary chassis suspension comprises a pair of suspension arms, a pair of hydraulically-operated actuators, a carriage and a pneumatically-operated actuator,

the carriage is supported by the suspension arms for pivotal movement,

the suspension arms and hydraulically-operated actuators are adapted to cooperatively suspend the carriage from the motor vehicle chassis,

the auxiliary chassis is adapted to be carried from overhead by the carriage and pivot therewith, and

the pneumatically-operated actuator is adapted to position the auxiliary chassis at a location under the carriage so as to be acted on at the designated location by the hydraulically-operated actuators via the carriage.

19. A dual trailing axle suspension system as set forth in claim **1** wherein

the auxiliary chassis suspension comprises a pair of suspension arms and a pair of hydraulically-operated actuators adapted to cooperatively suspend the auxiliary chassis from the motor vehicle chassis, and

the auxiliary chassis is fixed to the suspension arms so that the auxiliary chassis assumes a substantially upright position when the auxiliary chassis is in the deployed location.

20. A dual trailing axle suspension system as set forth in claim **1** wherein

the motor vehicle chassis supports a load container,

the auxiliary chassis suspension is adapted to suspend the auxiliary chassis from the load container and thereby from the motor vehicle chassis, and

the auxiliary chassis suspension is adapted to stow the auxiliary chassis on the load container.

21. A dual trailing axle suspension system as set forth in claim **1** wherein

the motor vehicle chassis supports a tiltable load container,

the auxiliary chassis suspension is adapted to suspend the auxiliary chassis from the tiltable load container and thereby from the motor vehicle chassis, and

the auxiliary chassis suspension is adapted to stow the auxiliary chassis on the tiltable load container.

* * * * *